website:http://biz.LGservice.com
e-mail:http://www.LGEservice.com/techsup.html

LCD TV
SERVICE MANUAL

CHASSIS : ML-041B

MODEL : RM-20LA70(RM-20LA70 Rev A)

***( ) ID LABEL Model No.**

CAUTION

BEFORE SERVICING THE CHASSIS,
READ THE SAFETY PRECAUTIONS IN THIS MANUAL.

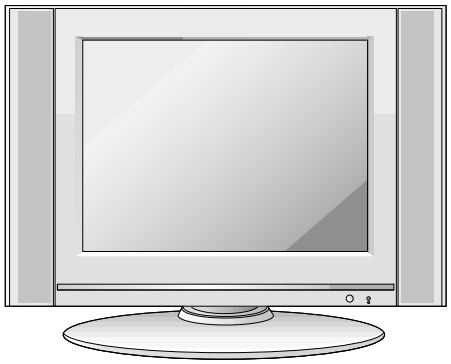

***Same looking with new chassis**

***Issue Date; 2004. 06**

CONTENTS

CONTENTS 2

PRODUCT SAFETY 3

SPECIFICATION 6

ADJUSTMENT INSTRUCTION 10

TROUBLE SHOOTING 12

BLOCK DIAGRAM.....17

WIRING DIAGRAM 19

EXPLODED VIEW 20

EXPLODED VIEW PARTS LIST 21

REPLACEMENT PARTS LIST 22

SVC. SHEET .....

SAFETY PRECAUTIONS

IMPORTANT SAFETY NOTICE

Many electrical and mechanical parts in this chassis have special safety-related characteristics. These parts are identified by ⚠ in the Schematic Diagram and Replacement Parts List.
It is essential that these special safety parts should be replaced with the same components as recommended in this manual to prevent X-RADIATION, Shock, Fire, or other Hazards.
Do not modify the original design without permission of manufacturer.

General Guidance

An **isolation Transformer should always be used** during the servicing of a receiver whose chassis is not isolated from the AC power line. Use a transformer of adequate power rating as this protects the technician from accidents resulting in personal injury from electrical shocks.

It will also protect the receiver and it's components from being damaged by accidental shorts of the circuitry that may be inadvertently introduced during the service operation.

If any fuse (or Fusible Resistor) in this TV receiver is blown, replace it with the specified.

When replacing a high wattage resistor (Oxide Metal Film Resistor, over 1W), keep the resistor 10mm away from PCB.

Keep wires away from high voltage or high temperature parts.

X-RAY Radiation

Warning:

The source of X-RAY RADIATION in this TV receiver is the High Voltage Section and the LCD PANEL.
For continued X-RAY RADIATION protection, the replacement panel must be the same type panel as specified in the Replacement Parts List.

To determine the presence of high voltage, use an accurate high impedance HV meter.

Adjust brightness, color, contrast controls to minimum.
Measure the high voltage.
The meter reading should indicate
23.5 ± 1.5KV: 14-19 inch, 26 ± 1.5KV: 19-21 inch,
29.0 ± 1.5KV: 25-29 inch, 30.0 ± 1.5KV: 32 inch
If the meter indication is out of tolerance, immediate service and correction is required to prevent the possibility of premature component failure.

Before returning the receiver to the customer,

always perform an **AC leakage current check** on the exposed metallic parts of the cabinet, such as antennas, terminals, etc., to be sure the set is safe to operate without damage of electrical shock.

Leakage Current Cold Check(Antenna Cold Check)
With the instrument AC plug removed from AC source, connect an electrical jumper across the two AC plug prongs. Place the AC switch in the on position, connect one lead of ohm-meter to the AC plug prongs tied together and touch other ohm-meter lead in turn to each exposed metallic parts such as antenna terminals, phone jacks, etc.
If the exposed metallic part has a return path to the chassis, the measured resistance should be between 1MΩ and 5.2MΩ.
When the exposed metal has no return path to the chassis the reading must be infinite.
An other abnormality exists that must be corrected before the receiver is returned to the customer.

Leakage Current Hot Check (See below Figure)
Plug the AC cord directly into the AC outlet.
Do not use a line Isolation Transformer during this check.
Connect 1.5K/10watt resistor in parallel with a 0.15uF capacitor between a known good earth ground (Water Pipe, Conduit, etc.) and the exposed metallic parts.
Measure the AC voltage across the resistor using AC voltmeter with 1000 ohms/volt or more sensitivity.
Reverse plug the AC cord into the AC outlet and repeat AC voltage measurements for each exposed metallic part. Any voltage measured must not exceed 0.75 volt RMS which is corresponds to 0.5mA.
In case any measurement is out of the limits specified, there is possibility of shock hazard and the set must be checked and repaired before it is returned to the customer.

Leakage Current Hot Check circuit

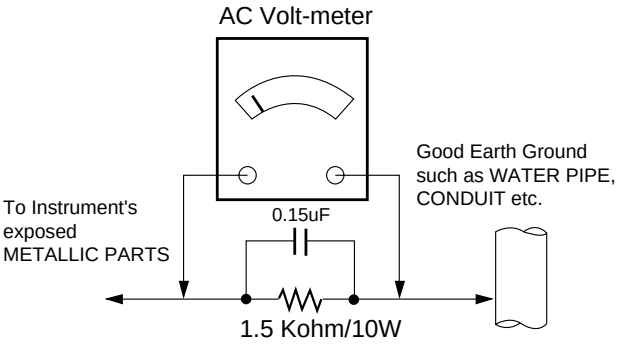

SERVICING PRECAUTIONS

CAUTION: Before servicing receivers covered by this service manual and its supplements and addenda, read and follow the *SAFETY PRECAUTIONS* on page 3 of this publication.

NOTE: If unforeseen circumstances create conflict between the following servicing precautions and any of the safety precautions on page 3 of this publication, always follow the safety precautions. Remember: Safety First.

General Servicing Precautions

1. Always unplug the receiver AC power cord from the AC power source before;
   a. Removing or reinstalling any component, circuit board module or any other receiver assembly.
   b. Disconnecting or reconnecting any receiver electrical plug or other electrical connection.
   c. Connecting a test substitute in parallel with an electrolytic capacitor in the receiver.
   CAUTION: A wrong part substitution or incorrect polarity installation of electrolytic capacitors may result in an explosion hazard.
2. Test high voltage only by measuring it with an appropriate high voltage meter or other voltage measuring device (DVM, FETVOM, etc) equipped with a suitable high voltage probe.
   Do not test high voltage by "drawing an arc".
3. Do not spray chemicals on or near this receiver or any of its assemblies.
4. Unless specified otherwise in this service manual, clean electrical contacts only by applying the following mixture to the contacts with a pipe cleaner, cotton-tipped stick or comparable non-abrasive applicator; 10% (by volume) Acetone and 90% (by volume) isopropyl alcohol (90%-99% strength)
   CAUTION: This is a flammable mixture.
   Unless specified otherwise in this service manual, lubrication of contacts in not required.
5. Do not defeat any plug/socket B+ voltage interlocks with which receivers covered by this service manual might be equipped.
6. Do not apply AC power to this instrument and/or any of its electrical assemblies unless all solid-state device heat sinks are correctly installed.
7. Always connect the test receiver ground lead to the receiver chassis ground before connecting the test receiver positive lead.
   Always remove the test receiver ground lead last.
8. *Use with this receiver only the test fixtures specified in this service manual.*
   CAUTION: Do not connect the test fixture ground strap to any heat sink in this receiver.

Electrostatically Sensitive (ES) Devices

Some semiconductor (solid-state) devices can be damaged easily by static electricity. Such components commonly are called *Electrostatically Sensitive (ES) Devices.* Examples of typical ES devices are integrated circuits and some field-effect transistors and semiconductor "chip" components. The following techniques should be used to help reduce the incidence of component damage caused by static by static electricity.

1. Immediately before handling any semiconductor component or semiconductor-equipped assembly, drain off any electrostatic charge on your body by touching a known earth ground. Alternatively, obtain and wear a commercially available discharging wrist strap device, which should be removed to prevent potential shock reasons prior to applying power to the unit under test.
2. After removing an electrical assembly equipped with ES devices, place the assembly on a conductive surface such as aluminum foil, to prevent electrostatic charge buildup or exposure of the assembly.
3. Use only a grounded-tip soldering iron to solder or unsolder ES devices.
4. Use only an anti-static type solder removal device. Some solder removal devices not classified as "anti-static" can generate electrical charges sufficient to damage ES devices.
5. Do not use freon-propelled chemicals. These can generate electrical charges sufficient to damage ES devices.
6. Do not remove a replacement ES device from its protective package until immediately before you are ready to install it. (Most replacement ES devices are packaged with leads electrically shorted together by conductive foam, aluminum foil or comparable conductive material).
7. Immediately before removing the protective material from the leads of a replacement ES device, touch the protective material to the chassis or circuit assembly into which the device will be installed.
   CAUTION: Be sure no power is applied to the chassis or circuit, and observe all other safety precautions.
8. Minimize bodily motions when handling unpackaged replacement ES devices. (Otherwise harmless motion such as the brushing together of your clothes fabric or the lifting of your foot from a carpeted floor can generate static electricity sufficient to damage an ES device.)

General Soldering Guidelines

1. Use a grounded-tip, low-wattage soldering iron and appropriate tip size and shape that will maintain tip temperature within the range or 500 °F to 600 °F.
2. Use an appropriate gauge of RMA resin-core solder composed of 60 parts tin/40 parts lead.
3. Keep the soldering iron tip clean and well tinned.
4. Thoroughly clean the surfaces to be soldered. Use a mall wire-bristle (0.5 inch, or 1.25cm) brush with a metal handle.
   Do not use freon-propelled spray-on cleaners.
5. Use the following unsoldering technique
   a. Allow the soldering iron tip to reach normal temperature. (500 °F to 600 °F)
   b. Heat the component lead until the solder melts.
   c. Quickly draw the melted solder with an anti-static, suction-type solder removal device or with solder braid.
   CAUTION: Work quickly to avoid overheating the circuitboard printed foil.
6. Use the following soldering technique.
   a. Allow the soldering iron tip to reach a normal temperature (500 °F to 600 °F)
   b. First, hold the soldering iron tip and solder the strand against the component lead until the solder melts.
   c. Quickly move the soldering iron tip to the junction of the component lead and the printed circuit foil, and hold it there only until the solder flows onto and around both the component lead and the foil.
   CAUTION: Work quickly to avoid overheating the circuit board printed foil.
   d. Closely inspect the solder area and remove any excess or splashed solder with a small wire-bristle brush.

IC Remove/Replacement

Some chassis circuit boards have slotted holes (oblong) through which the IC leads are inserted and then bent flat against the circuit foil. When holes are the slotted type, the following technique should be used to remove and replace the IC. When working with boards using the familiar round hole, use the standard technique as outlined in paragraphs 5 and 6 above.

Removal

1. Desolder and straighten each IC lead in one operation by gently prying up on the lead with the soldering iron tip as the solder melts.
2. Draw away the melted solder with an anti-static suction-type solder removal device (or with solder braid) before removing the IC.

Replacement

1. Carefully insert the replacement IC in the circuit board.
2. Carefully bend each IC lead against the circuit foil pad and solder it.
3. Clean the soldered areas with a small wire-bristle brush. (It is not necessary to reapply acrylic coating to the areas).

"Small-Signal" Discrete Transistor Removal/Replacement

1. Remove the defective transistor by clipping its leads as close as possible to the component body.
2. Bend into a "U" shape the end of each of three leads remaining on the circuit board.
3. Bend into a "U" shape the replacement transistor leads.
4. Connect the replacement transistor leads to the corresponding leads extending from the circuit board and crimp the "U" with long nose pliers to insure metal to metal contact then solder each connection.

Power Output, Transistor Device Removal/Replacement

1. Heat and remove all solder from around the transistor leads.
2. Remove the heat sink mounting screw (if so equipped).
3. Carefully remove the transistor from the heat sink of the circuit board.
4. Insert new transistor in the circuit board.
5. Solder each transistor lead, and clip off excess lead.
6. Replace heat sink.

Diode Removal/Replacement

1. Remove defective diode by clipping its leads as close as possible to diode body.
2. Bend the two remaining leads perpendicular y to the circuit board.
3. Observing diode polarity, wrap each lead of the new diode around the corresponding lead on the circuit board.
4. Securely crimp each connection and solder it.
5. Inspect (on the circuit board copper side) the solder joints of the two "original" leads. If they are not shiny, reheat them and if necessary, apply additional solder.

Fuse and Conventional Resistor Removal/Replacement

1. Clip each fuse or resistor lead at top of the circuit board hollow stake.
2. Securely crimp the leads of replacement component around notch at stake top.
3. Solder the connections.
   CAUTION: Maintain original spacing between the replaced component and adjacent components and the circuit board to prevent excessive component temperatures.

Circuit Board Foil Repair

Excessive heat applied to the copper foil of any printed circuit board will weaken the adhesive that bonds the foil to the circuit board causing the foil to separate from or "lift-off" the board. The following guidelines and procedures should be followed whenever this condition is encountered.

At IC Connections

To repair a defective copper pattern at IC connections use the following procedure to install a jumper wire on the copper pattern side of the circuit board. (Use this technique only on IC connections).

1. Carefully remove the damaged copper pattern with a sharp knife. (Remove only as much copper as absolutely necessary).
2. carefully scratch away the solder resist and acrylic coating (if used) from the end of the remaining copper pattern.
3. Bend a small "U" in one end of a small gauge jumper wire and carefully crimp it around the IC pin. Solder the IC connection.
4. Route the jumper wire along the path of the out-away copper pattern and let it overlap the previously scraped end of the good copper pattern. Solder the overlapped area and clip off any excess jumper wire.

At Other Connections

Use the following technique to repair the defective copper pattern at connections other than IC Pins. This technique involves the installation of a jumper wire on the component side of the circuit board.

1. Remove the defective copper pattern with a sharp knife. Remove at least 1/4 inch of copper, to ensure that a hazardous condition will not exist if the jumper wire opens.
2. Trace along the copper pattern from both sides of the pattern break and locate the nearest component that is directly connected to the affected copper pattern.
3. Connect insulated 20-gauge jumper wire from the lead of the nearest component on one side of the pattern break to the lead of the nearest component on the other side. Carefully crimp and solder the connections.
   CAUTION: Be sure the insulated jumper wire is dressed so the it does not touch components or sharp edges.

SPECIFICATION

NOTE : Specifications and others are subject to change without notice for improvement.

1. Application range

This specification is applied to ML-041B chassis.

2. Requirement for Test

Testing for standard of each part must be followed in below condition.

(1) Temperature: 25°C ± 2°C
(2) Humidity: 65% ± 10%
(3) Power: Standard input voltage (AC 100-240V, 50/60Hz)
(4) Measurement must be performed after heat-run more than 30min.
(5) Adjusting standard for this chassis is followed a special standard.

3.General Specification

No.	Item	Specification	Remark
1	Maker	LPL	LPL
	Type	TFT Color LCD Module	
	ActiveDisplay Area	20.1 inches(380.16mm) diagonal(Aspect 4:3)	
	Pixel Pitch [mm]	0.6375mm(H)x0.6375mm(V)xRGB	
	Electrical Interface	TTL	
	Color Depth	8BIT, 16,777,216 colors	
	Size [mm]	450(H)x 348.7(V)x20(D)	
	Surface Treatment	Glare, Hard Coating(3H)	
	Operating Mode	Normally Black	
	Back light Unit	6 CCFL(6 lamps)	
	R/T Typ.	16ms(R.T.:7/10ms + F.T.:18/20ms)	
2	Maker	AUO	AUO
	Type	TFT Color LCD Module	
	ActiveDisplay Area	20.1 inches(510.00mm) diagonal	
	Pixel Pitch [mm]	0. 6376mm(H)x0.6375mm(V)xRGB	
	Electrical Interface	TTL	
	Color Depth	8-BIT 16,777.216 Colors	
	Size [mm]	434(H)x331.6(V)x29.6(D)	
	Surface Treatment	Hard Coating, AR,Glare (3H)	
	Operating Mode	Normally Black	
	Back light Unit	6 CCFL(6 lamps)	
	R/T Typ.	16ms	
3	Maker	CMO	CMO
	Type	TFT Color LCD Module	
	ActiveDisplay Area	20.1 inches(510.00mm) diagonal	
	Pixel Pitch [mm]	0. 6375mm(H)x0.6375mm(V)xRGB	
	Electrical Interface	TTL	
	Color Depth	8-BIT 16,777.216 Colors	
	Size [mm]	448(H)x339.6(V)x25(D)	
	Surface Treatment	Anti Glare, Hard Coating(3H)	
	Operating Mode	Normally Black	
	Back light Unit	6 CCFL(6 lamps)	
	R/T Typ.	16ms(R.T.:5/7ms + F.T.:11/14ms)	

4. Feature and Function

No.	Item	Specification	Remark
1	Teletext	TOP, FLOF	Top(option)
2	REMOCON	NEC Code	PAL/ NTSC
3	CVBS VIDEO Input	1	Rear
4	S-VIDEO Input	1	Rear
5	Component input	1	Rear (option, NT)
6	PERI TV Connector	Full SCART : 1	Rear (option,EU)
7	H/p input	1	Rear
8	RS-232	NO	
9	Discrete IR	NO	
10	2 Carrier Stereo	BG, DK	
11	NICAM Stereo	BG, I, LL'	
12	2 Carrier Dual	BG, DK	
13	NICAM Dual	BG, I, LL'	
14	DW(Double Window) Mode	X	
15	MW(Multi Window) Mode	X	
16	Film Mode	O	
17	Noise Reduction	X	
18	Progressive Scan	O	
19	Motion Detection	X	
20	SRS WOW	X	
21	wivel Speaker	X	
22	Ez-pip	X	
23	ARC	O	
24	DRP	O	
25	DCDI	X	
26	HDCP	X	

5.Optical Character

No.	Item	Specification						Remark
					LPL	CMO	CMO	
1	Viewing Angle	R/L,			85/85	80/80	85/85	
	<CR≥10>	U/D			85/85	75/65	90/90	
2	Luminance	Luminance(cd/㎡)			400	450	450	Typical
		Variation			1.3	1.3	1.3	MAX/MIN
3	Contrast Ratio				400	500	600	ALL white/All black
4	CIE Color Coordinates	WHITE	W_X	Typ.	0.289	0.285	0.31	
			W_Y	Typ.	0.335	0.293	0.33	
		RED	W_r	Typ.	0.692	0.692	0.64	
			Y_r	Typ.	0.335	0.332	0.34	
		Green	X_g	Typ.	0.289	0.276	0.29	
			Y_g	Typ.	0.583	0.601	0.61	
		Blue	Xb	Typ.	0.143	0.142	0.14	
			Yb	Typ.	0.909	0.075	0.07	

6.Engineering Specification

No.	Item	Specification			Remark
1	Power Supply	H/V Sync	Video	Power Consumption	LED Color
	Normal	On/On	Active	≤ 65W	GREEN
	Stand By Suspend Mode DPM Off Mode	Off/On On/Off Off/Off	Off	≤ 1W ≤ 1W ≤ 1W	LED
	Cut-off Switch off	-	-	0W	OFF
				PBP SWAP ▶ ON/OFF	
	ITEM	Specification			Remark
2	D-SUB Pin Configuraion	1: RED 3: Blue: 5: S.T(GND) 7: Green GND 9: N.C 11: ID0(GND) 13: H-Sync 15: SCL	2: Green 4: ID2(GND) 6: RED GND 8: Blue GND 10: D-GND 12: SDA 14: V-Sync Shell: GND		10: Digital GND
3	Control Function	1) Contrast/Brightness 2) H-Position/V-Position 3) Tracking : Clock/ Phase 4) Auto Configure RESET			
4	Comoponent Jack	1: Y 3: Pb 5: Pr			Middle east/ NTSC Area
5	D4 Jack (525i, 525p, 750p, 1125i)	1: Y GND 2: Pb 5: Pr 7: LINE1 Ready 9: Line2 11: Line3 13: Line3 ready	2: Y GND 4: Pb GND 6: Pr GND 8: LINE1 10: Line2 Ready 12: SWITCH GND 14: SWITCH		JAPAN Only

6-2.Power

NO	Item	Min	Typ	Max	Unit	Remark
1	AC Power Shut Down Voltage	90		264	V	
2	DC Voltage, Inverter	22.8	24	25.2	V	
3	DC Voltage, LCD Panel	11.4	12	12.6	V	
4	DC Voltage, Audio	14.0	15	16.0	V	
5	DC Voltage, Tuner(5)	4.5	5	5.5	V	
	DC Voltage, Tuner(9)	8.5	9	9.5	V	Japan only
6	DC Voltage, Tuning(31)	31	33	35	V	
7	DC Voltage, VCTi(5)	4.5	5	5.5	V	
	DC Voltage, VCTi(8)	7.5	8	8.5	V	
8	DC Voltage, VCTi(3.3)	3.1	3.3	3.5	V	
	DC Voltage, VCTi(1.8)	1.6	1.8	2.0	V	
9	DC Voltage, GM2221 (3.3)	3.1	3.3	3.5	V	
	DC Voltage, GM2221 (1.8)	1.6	1.8	2.0	V	
10	DC Voltage, Digital (3.3)	2.8	3.3	3.8	V	
11	DC Voltage, Digital (5)	4.5	5	5.5	V	

6-3. External Interface

NO	Item	Min	Typ	Max	Unit	Remark	
1.	Video Input Level	0.85	1	1.15	Vpp	EN-50049	
2.	Audio Input Level	0.4	0.5	0.6	V	NTSC:0.4Vrms(Typ)	
3.	Audio Input Frequency Response	0.1		7	KHz		
4.	Audio Input S/N	40			DB		
5.	Audio Input Distortion			2	%		
6.	Audio Input Dynamic Range	2			V		
7.	Video Output Level	0.85	1	1.15	Vpp		
8.	Video Output Frequency Response	3.8			MHz		
9.	Video Output S/N	40			DB		
10.	Audio Output Level	0.4	0.5	0.6	V		
11.	Audio Output Frequency Response	0.1		7	KHz		
12.	Audio Output S/N	40			DB		
13.	Audio Output Distortion			2	%		
14.	Video Input Level, R/G/B	0.6	0.7	0.8	Vpp	75 ohm	
15.	Video Input Level, Component(Y, PB, PR)	0.6	0.7	0.8	Vpp	75 ohm	
16.	RGB Input Resolution, Vertical		768		Pixel	Only 20"	640 Pixel
17.	RGB Input Resolution, Horizontal		1280		Pixel		480
18.	RGB Input Horizontal Frequency				KHz	See table 5-5	
19.	RGB Input Frame Rate				Hz	See table 5-5	

6-4. The Others

NO	Item	Min	Typ	Max	Unit	Remark
1	Search Sensitivity			-85	dBm	
2	Soft Ware Functionality Test					LGE Specification
3	REMOCON Working Sensitivity, Straight	0.1		10	m	
4	REMOCON Working Sensitivity, T/B/L/R	0.1		9	m	30 degree
5	Closed Caption Sensitivity			-70	dBm	NTSC ONLY
6	Teletext Sensitivity			-70	dBm	

ADJUSTMENT INSTRUCTION

1. Application Object

This instruction is for the application to the LCD TV.

2. Adjustment

2.1 Adjustment overview

The unit is set to automatically adjust using the factory automation equipment. However when errors occur, it should be adjusted manually.

2.2 Auto Gain/Offset adjustment

2.2.1 RF Mode adjustment

2.2.1.1 Adjustment preparation

■Conduct Heat Run at the RF fog signals for more than 30 minutes.

2.2.1.2 Auto Gain/Offset adjustment

■Press IN-START Key to convert to the adjustment mode using the adjustment (SVC) remote controller, and press VOL+ Key at the Auto Gain menu.
(In case of RM-20LA70, press IN-START Key twice)

■ Once the adjustment is completed, press the Enter Key to save and finish the adjustment.

2.2.2 Component Mode adjustment

2.2.2.1 Adjustment preparation

■Conduct Heat Run at the RF fog signals for more than 30 minutes.

■ Connect the Pattern Generator to the Component Jack (Y, Pb, Pr) of LCD TV.

2.2.2.2 Auto Gain/Offset adjustment

■ Convert the input mode to the component input.

■ Using the Pattern Generator (801GF, VG819) adjust 480P for resolution and Color Bar
signals for patterns. Or adjust Color Bar signals in accordance with VG819.

■ Press the IN-START Key to convert into the adjustment mode using the adjustment (SVC) remote controller, and press VOL+ Key at the Auto Gain menu.

■ Once the adjustment is completed, press the Enter Key to save and finish the adjustment

SVC REMOCON

NO	KEY	FUNTION	REAMARK
1	POWER	To turn the TV on or off	
2	POWER ON	To turn the TV on automatically if the power is supplied to the TV. (Use the POWER key to deactivate): It should be deactivated when delivered.	
3	MUTE	To activate the mute function.	
4	P-CHECK	To check TV screen image easily.	Shortcut keys
5	S-CHECK	To check TV screen sound easily	Shortcut keys
6	ARC	To select size of the main screen (Normal, Spectacle, Wide or Zoom)	Shortcut keys
7	CAPTION	Switch to closed caption broadcasting	
8	TXT	To toggle on/off the teletext mode	
9	TV/AV	To select an external input for the TV screen	
10	TURBO SOUND	To start turbo sound	
11	TURBO PICTURE	To start turbo picture	
12	IN-START	To enter adjustment mode when manufacturing the TV sets.	Use the AV key to enter the screen W/B adjustment mode.
		To adjust the screen voltage (automatic): In-start →mute →Adjust →AV(Enter into W/B adjustment mode)	
		W/B adjustment (automatic): After adjusting the screen →W/B adjustment →Exit two times (Adjustment completed)	
13	ADJ	To enter into the adjustment mode. To adjust horizontal line and sub-brightness.	
14	MPX	To select the multiple sound mode (Mono, Stereo or Foreign language)	
15	EXIT	To release the adjustment mode	
16	APC(PSM)	To easily adjust the screen according to surrounding brightness	
17	ASC(SSM)	To easily adjust sound according to the program type	
18	MULTIMIDIA	To check component input	Shortcut keys
19	FRONT-AV	To check the front AV	Shortcut keys
20	CH±	To move channel up/down or to select a function displayed on the screen.	
21	VOL±	To adjust the volume or accurately control a specific function.	
22	ENTER	To set a specific function or complete setting.	
23	PIP CH-(OP1)	To move the channel down in the PIP screen. To use as a red key in the teletext mode	
24	PIP CH+(OP2)	To move the channel in the PIP screen To use as a green key in the teletext mode	
25	PIP SWAP(OP3)	To switch between the main and sub screens To use as a yellow key in the teletext mode	
26	PIP INPUT(OP4)	To select the input status in the PIP screen To use as a blue key in the teletext mode	
27	EYE	To set a function that will automatically adjust screen status to match the surrounding brightness so natural color can be displayed.	
28	MENU	To select the functions such as video, voice, function or channel.	
29	IN-STOP	To set the delivery condition status after manufacturing the TV set.	
30	STILL	To halt the main screen in the normal mode, or the sub screen at the PIP screen. Used as a hold key in the teletext mode (Page updating is stopped.)	
31	TIME	Displays the teletext time in the normal mode Enables to select the sub code in the teletext mode	
32	SIZE	Used as the size key in the PIP screen in the normal mode Used as the size key in the teletext mode	
33	MULTI PIP	Used as the index key in the teletext mode (Top index will be displayed if it is the top text.)	
34	POSITION	To select the position of the PIP screen in the normal mode Used as the update key in the teletext mode (Text will be displayed if the current page is updated.)	
35	MODE	Used as Mode in the teletext mode	
36	PIP	To select the simultaneous screen	
37	TILT	To adjust screen tilt	Shortcut keys
38	0~9	To manually select the channel.	

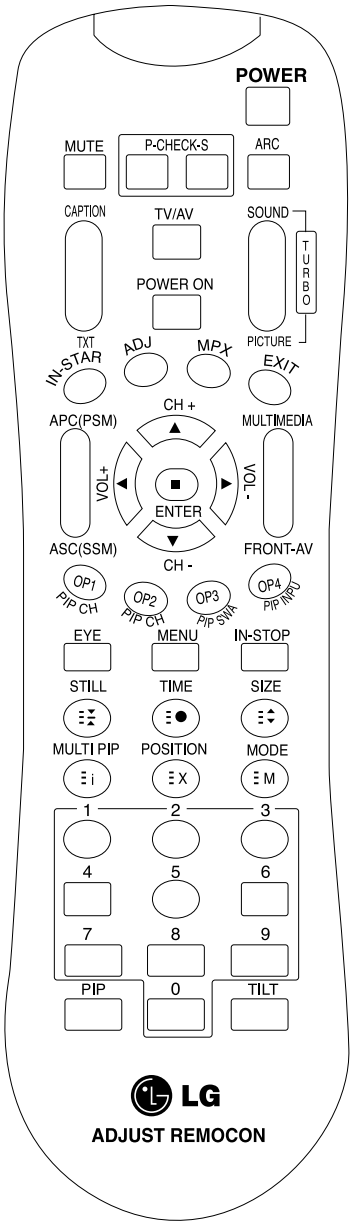

TROUBLESHOOTING

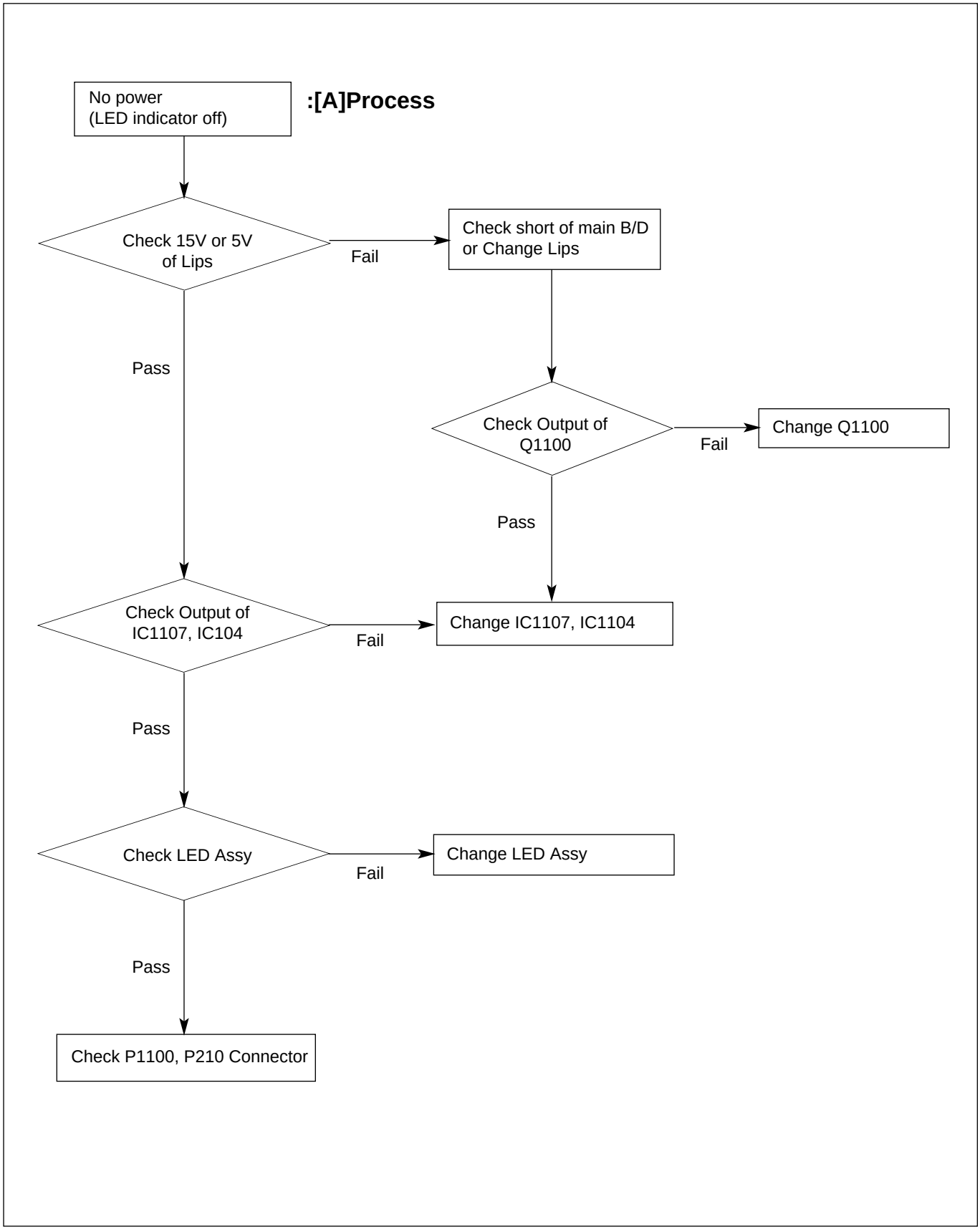

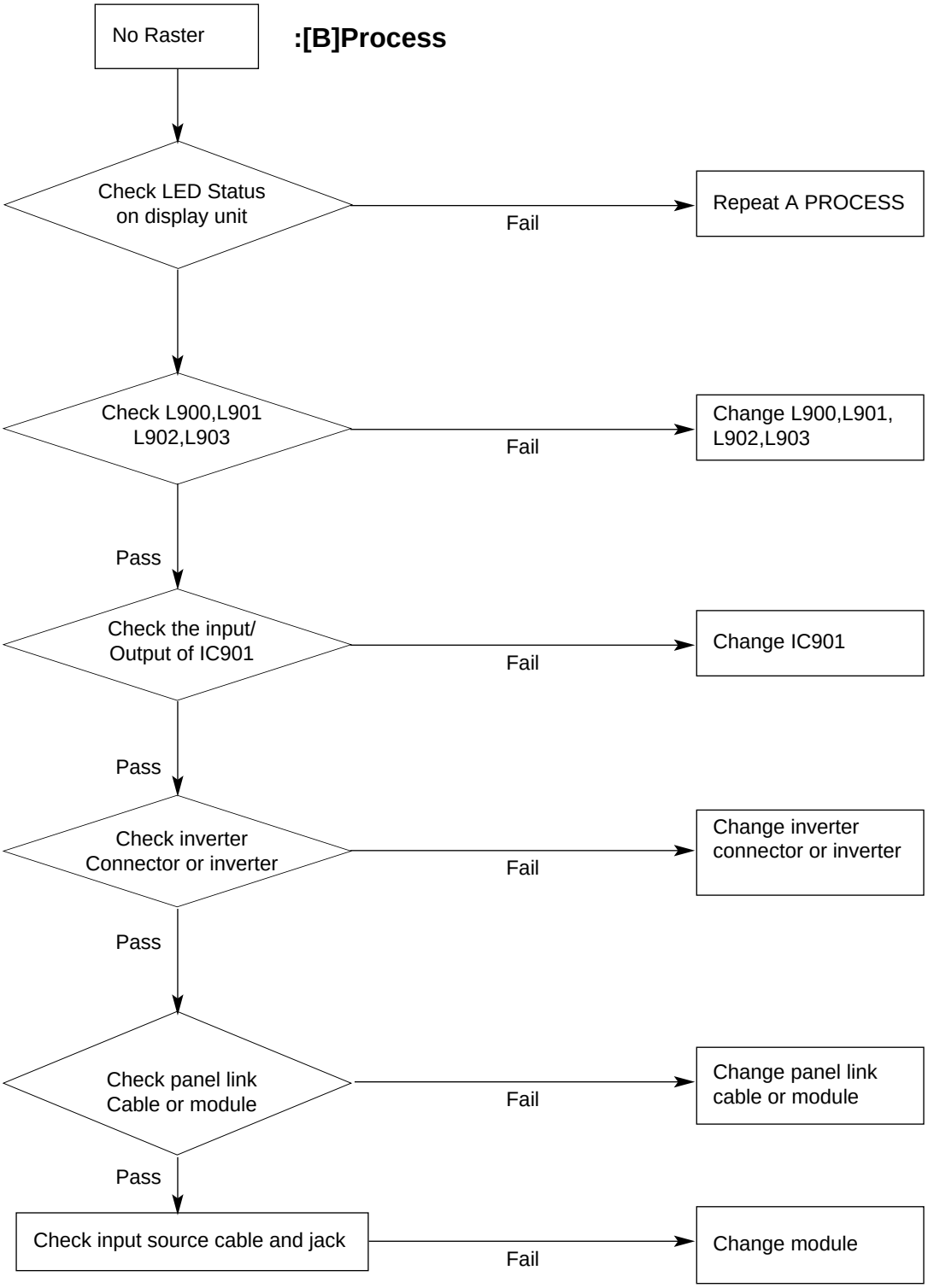
No Raster
:[B]Process
Check LED Status on display unit
Fail
Repeat A PROCESS
Check L900,L901 L902,L903
Fail
Change L900,L901, L902,L903
Pass
Check the input/ Output of IC901
Fail
Change IC901
Pass
Check inverter Connector or inverter
Fail
Change inverter connector or inverter
Pass
Check panel link Cable or module
Fail
Change panel link cable or module
Pass
Check input source cable and jack
Fail
Change module

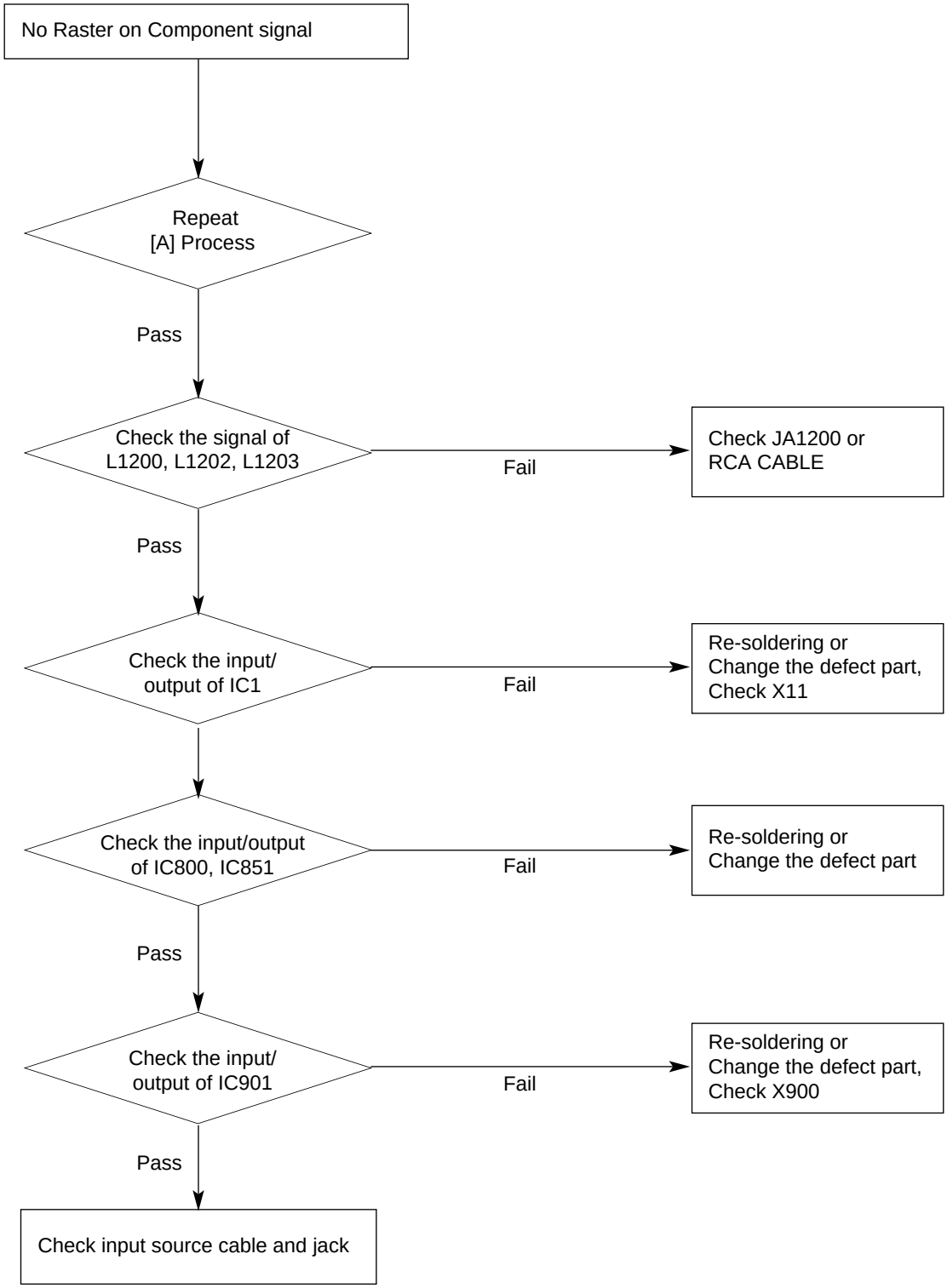
No Raster on Component signal
Repeat
[A] Process
Pass
Check the signal of
L1200, L1202, L1203
Fail
Check JA1200 or
RCA CABLE
Pass
Check the input/
output of IC1
Fail
Re-soldering or
Change the defect part,
Check X11
Check the input/output
of IC800, IC851
Fail
Re-soldering or
Change the defect part
Pass
Check the input/
output of IC901
Fail
Re-soldering or
Change the defect part,
Check X900
Pass
Check input source cable and jack

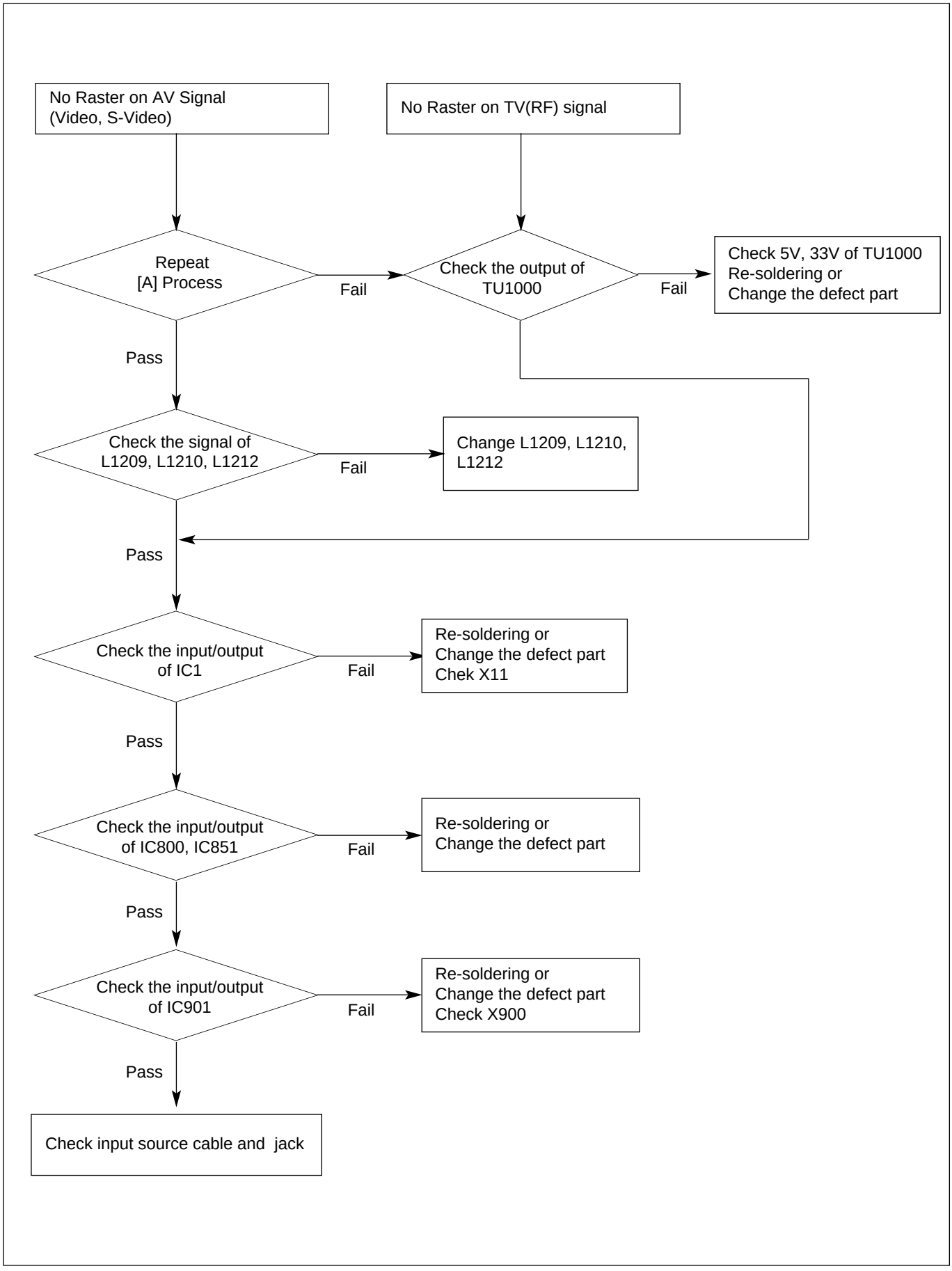
No Raster on AV Signal
(Video, S-Video)
No Raster on TV(RF) signal
Repeat
[A] Process
Fail
Check the output of
TU1000
Fail
Check 5V, 33V of TU1000
Re-soldering or
Change the defect part
Pass
Check the signal of
L1209, L1210, L1212
Fail
Change L1209, L1210,
L1212
Pass
Check the input/output
of IC1
Fail
Re-soldering or
Change the defect part
Chek X11
Pass
Check the input/output
of IC800, IC851
Fail
Re-soldering or
Change the defect part
Pass
Check the input/output
of IC901
Fail
Re-soldering or
Change the defect part
Check X900
Pass
Check input source cable and jack

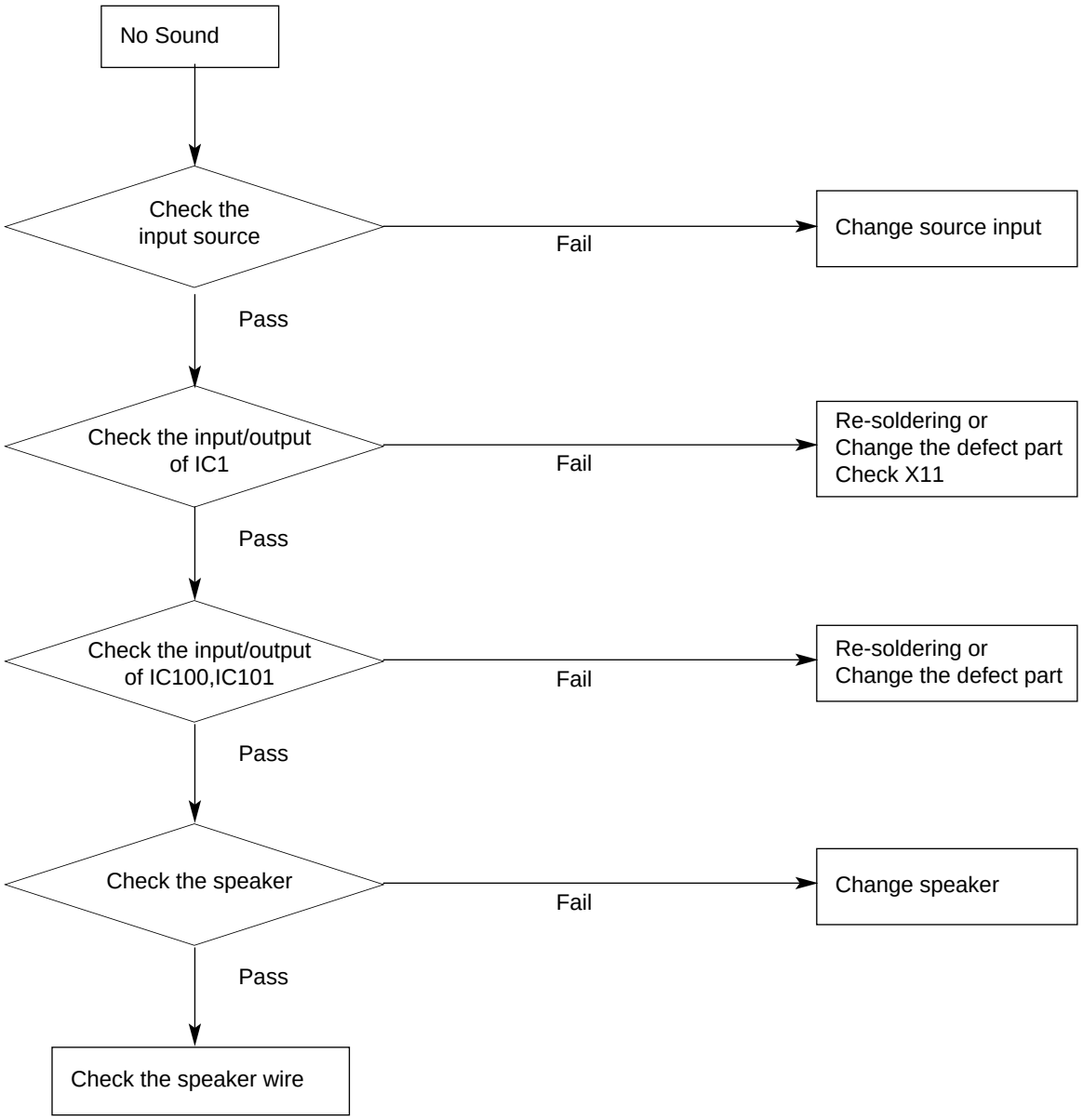
No Sound
Check the input source
Fail
Change source input
Pass
Check the input/output of IC1
Fail
Re-soldering or Change the defect part Check X11
Pass
Check the input/output of IC100,IC101
Fail
Re-soldering or Change the defect part
Pass
Check the speaker
Fail
Change speaker
Pass
Check the speaker wire

BLOCK DIAGRAM

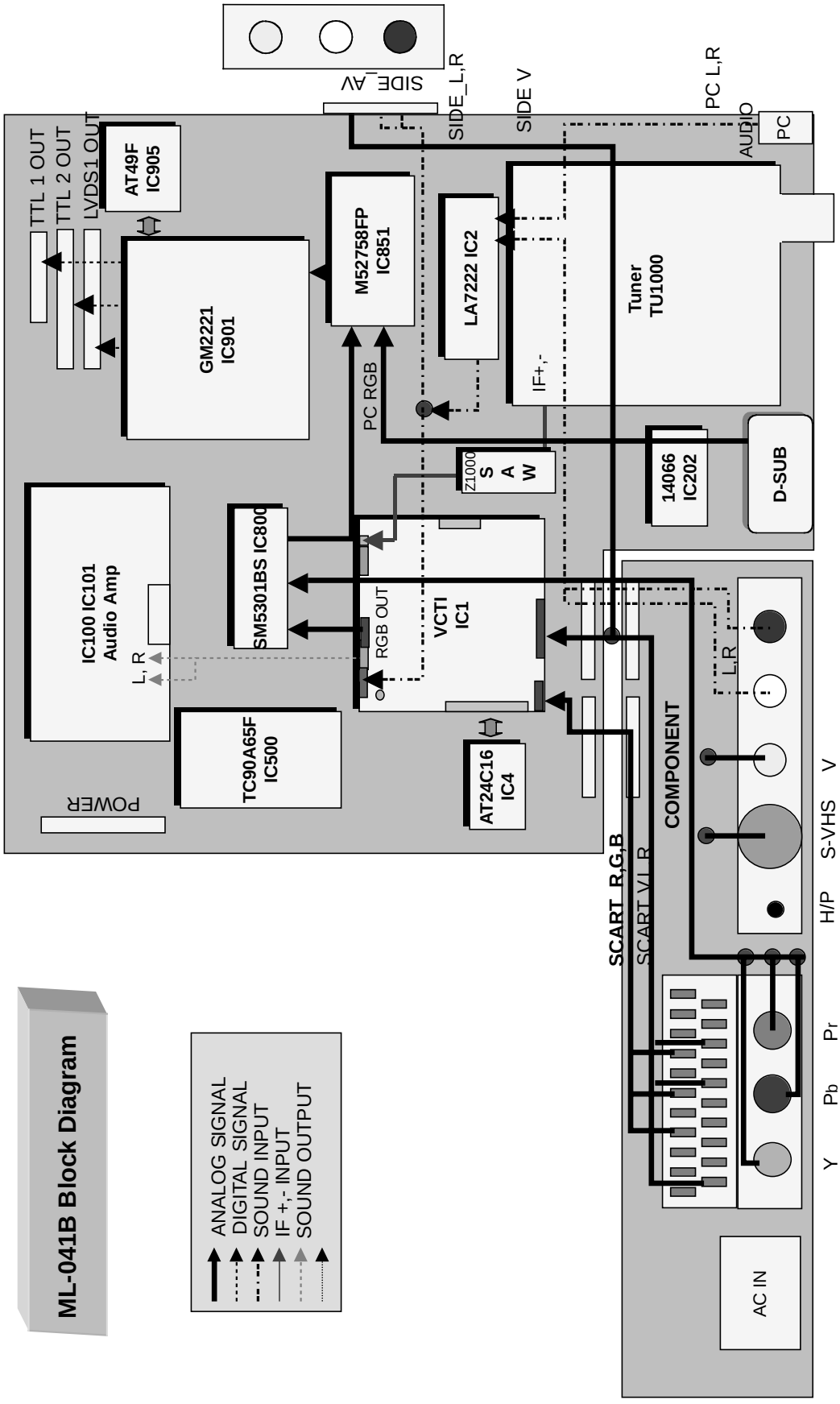

BLOCK DIAGRAM DESCRIPTION

1. Video Controller Unit & Display Data Conversion Unit

The video controller unit receives the video signals inputted through the tuner, AV port (AV1, AV2, S-Video, component), and converts them into an analog RGB signal through the microcomputer (VCTI) combined with the video decoder that integrates various functions in one chip.

Either the analog RGB, component YPbPr or PC RGB signal is selected by the switching IC and inputted to a scaler (GM2221), which is sent to the LCD module after being modified to an LVDS signal through the integrated LVDS IC.

Or, it is sent to the LCD module as a TTL output.

VCTi is the main microprocessor that handles video signal processing and sound signal processing. It also manages the RF signals received from the tuner.

The scaler can control timing to fit into the LCD panel, and can also control the size and position of the input signal.

2. Power Supply Unit

The power supply unit provides 15V and 5V DC power to the mainboard.

The PWM Step-Up DC/DC Converter circuit is used to generate the 33V used for the tuner.

15V power is directly used by the sound amplifier IC and is also used to generate 5V power through the regulator. 12V power is used for the LCD panel power, and 5V power is converted to 3.3V and 1.8V power through the regulator, which in turn supplies electrical power for ICs such as VCTI and scaler.

WIRING DIAGRAM

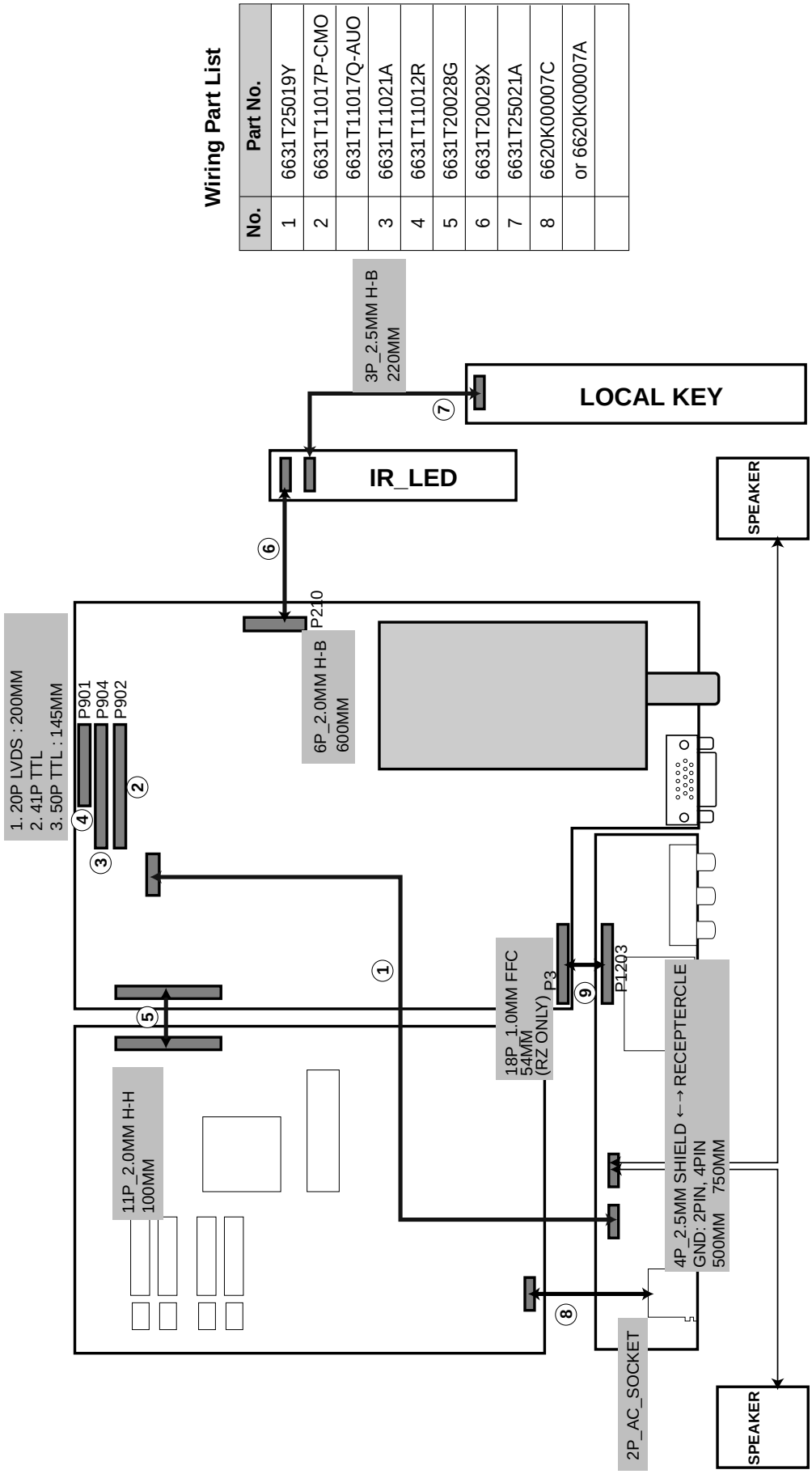

Wiring Part List

No.	Part No.
1	6631T25019Y
2	6631T11017P-CMO
	6631T11017Q-AUO
3	6631T11021A
4	6631T11012R
5	6631T20028G
6	6631T20029X
7	6631T25021A
8	6620K00007C
	or 6620K00007A

EXPLODED VIEW

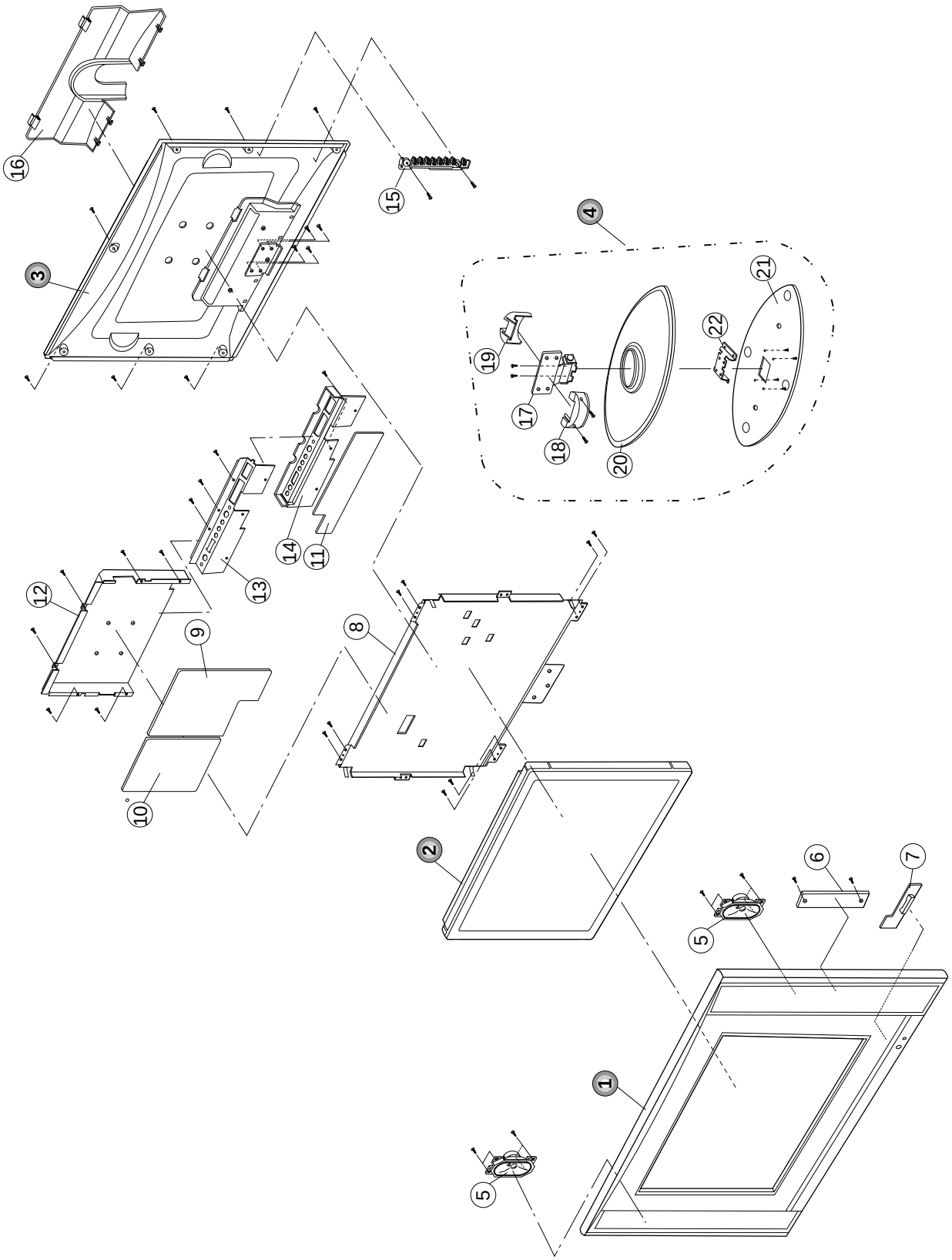

EXPLODED VIEW PARTS LIST

No.	PART NO.	DESCRIPTION
1	3091TKD005A	CABINET ASSEMBLY,RM-20LA77 BRAND 3090V00519 NON
2	6306V20002A	LCD(LIQUID CRYSTAL DISPLAY), V201V1-T02 VGA CHIMEI TFT COLOR NON
3	3809TKD002G	BACK COVER ASSEMBLY, RM-20LA77 3808V00407 CMO
4	4811V00073A	BRACKET ASSEMBLY, STAND RZ-20LA70 NON .
5	6400GKTX01C	SPEAKER,FULLRANGE, F1527C-6428-4 K-TONE FULL-RANGE(GENERAL) 4 OHM 7/12W 85DB OTHERS 40*70MM TRACK TYPE
6	6871TST562A	PWB(PCB) ASSEMBLY,SUB, RM-20LA77 ML041B SUB TOTAL BRAND CONTROL BOARD ASSY
7	6871TST563A	PWB(PCB) ASSEMBLY,SUB, RM-20LA77 ML041B SUB TOTAL BRAND IR BOARD ASSY
8	4951TKS175C	METAL ASSEMBLY, FRAME METAL, ASSY 20LA70(CMO)
9	3313TP2019A	MAIN TOTAL ASSEMBLY, RM-20LA77 BRAND ML-041B
10	6871TPT280A	PWB(PCB) ASSEMBLY,POWER, RM-20LA77 POWER TOTAL LIEN CHANG LIPS FOR CMO/AUO
11	6871TST561A	PWB(PCB) ASSEMBLY,SUB, RM-20LA70 ML-041B SUB TOTAL BRAND JACK(DVD) BOARD ASSY
12	4951TKK186A	METAL ASSEMBLY, SHIELD REAR RM-20LA77
13	4950TKK916A	METAL, PLATE 15, 20LA70 REAR A/V "B"T
14	4810V00925B	BRACKET, REAR AV RZ-15LA70 ML024E HIPS .
15	5020V00871A	BUTTON, CONTROL RZ-20LA70 ABS 8KEY .
16	3550V00383A	COVER, REAR AV RZ-20LA70 HIPS 60HR .
17	4950V00157E	METAL, HINGE ASSY NON 20LA70
18	4810V00767A	BRACKET, STAND 20LA60 ML012B NON HINGE FRONT
19	4810V00768A	BRACKET, STAND 20LA60 ML012B NON HINGE COVER
20	4810V00924A	BRACKET, STAND RZ-20LA70 NON ABS .
21	4950V00194A	METAL, STAND SPCC(CR) SUPPORTER(LA70)
22	4950V00193A	METAL, STAND SPCC(CR) BASE(20LA70)

REPLACEMENT PARTS LIST

For Capacitor & Resistors, the charactors at 2nd and 3rd digit in the P/No. means as follows;

CC, CX, CK, CN, CH : Ceramic
CQ : Polyestor
CE : Electrolytic
CF : Fixed Film

RD : Carbon Film
RS : Metal Oxide Film
RN : Metal Film
RH : CHIP, Metal Glazed(Chip)
RR : Drawing

DATE: 2004. 6. 16.

*S	*AL	LOC. NO.	PART NO.	DESCRIPTION / SPECIFICATION
		MAIN BOARD		
		CAPACITOR		
		C1008	0CE227CF638	"220UF SHL,SD 16V M FM5 TP 5"
		C1101	0CE227BH638	220U KME 25V M FM5 TP5
		C1104	0CE227BH638	220U KME 25V M FM5 TP5
		C1107	0CE227BH638	220U KME 25V M FM5 TP5
		C1140	0CE227BH638	220U KME 25V M FM5 TP5
		C1152	0CE107BK638	100UF KME 50V M FM5 TP5
		C123	0CE477BH618	470UF KME TYPE 25V M FL TP 5
		C124	0CE477BH618	470UF KME TYPE 25V M FL TP 5
		C131	0CE477BH618	470UF KME TYPE 25V M FL TP 5
		C132	0CE477BH618	470UF KME TYPE 25V M FL TP 5
		C133	0CE477BH618	470UF KME TYPE 25V M FL TP 5
		C134	0CE477BH618	470UF KME TYPE 25V M FL TP 5
		C1150	0CH3105F946	1UF 16V Z F 2012 R/TP
		C1151	0CH3104K946	100000PF 50V Z F 2012 R/TP
		C127	0CH3104K946	100000PF 50V Z F 2012 R/TP
		C128	0CH3104K946	100000PF 50V Z F 2012 R/TP
		C135	0CH3104K946	100000PF 50V Z F 2012 R/TP
		C136	0CH3104K946	100000PF 50V Z F 2012 R/TP
		C15	0CH3104K946	100000PF 50V Z F 2012 R/TP
		C16	0CH3104K946	100000PF 50V Z F 2012 R/TP
		C19	0CH3104K946	100000PF 50V Z F 2012 R/TP
		C203	0CH3104K946	100000PF 50V Z F 2012 R/TP
		C4	0CH3104K946	100000PF 50V Z F 2012 R/TP
		C41	0CH3104K946	100000PF 50V Z F 2012 R/TP
		C44	0CH3104K946	100000PF 50V Z F 2012 R/TP
		C49	0CH3104K946	100000PF 50V Z F 2012 R/TP
		C6	0CH3104K946	100000PF 50V Z F 2012 R/TP
		C803	0CH3105F946	1UF 16V Z F 2012 R/TP
		C804	0CH3104K946	100000PF 50V Z F 2012 R/TP
		C808	0CH3104K946	100000PF 50V Z F 2012 R/TP
		C810	0CH3104K946	100000PF 50V Z F 2012 R/TP
		C812	0CH3105F946	1UF 16V Z F 2012 R/TP
		C851	0CH3104K946	100000PF 50V Z F 2012 R/TP
		C854	0CH3104K946	100000PF 50V Z F 2012 R/TP
		C855	0CH3104K946	100000PF 50V Z F 2012 R/TP
		C858	0CH3104K946	100000PF 50V Z F 2012 R/TP
		C863	0CH3104K946	100000PF 50V Z F 2012 R/TP
		C866	0CH3104K946	100000PF 50V Z F 2012 R/TP
		C867	0CH3104K946	100000PF 50V Z F 2012 R/TP
		C869	0CH3104K946	100000PF 50V Z F 2012 R/TP
		C871	0CH3104K946	100000PF 50V Z F 2012 R/TP
		C874	0CH3104K946	100000PF 50V Z F 2012 R/TP
		C875	0CH3104K946	100000PF 50V Z F 2012 R/TP
		C877	0CH3104K946	100000PF 50V Z F 2012 R/TP
		C909	0CH3104K946	100000PF 50V Z F 2012 R/TP
		C910	0CH3104K946	100000PF 50V Z F 2012 R/TP
		C917	0CH3104K946	100000PF 50V Z F 2012 R/TP
		C920	0CH3104K946	100000PF 50V Z F 2012 R/TP
		C925	0CH3104K946	100000PF 50V Z F 2012 R/TP
		C926	0CH3104K946	100000PF 50V Z F 2012 R/TP
		C927	0CH3104K946	100000PF 50V Z F 2012 R/TP
		C928	0CH3104K946	100000PF 50V Z F 2012 R/TP
		C929	0CH3104K946	100000PF 50V Z F 2012 R/TP

DATE: 2004. 06.16.

*S	*AL	LOC. NO.	PART NO.	DESCRIPTION / SPECIFICATION
		C930	0CH3104K946	100000PF 50V Z F 2012 R/TP
		C934	0CH3104K946	100000PF 50V Z F 2012 R/TP
		C935	0CH3104K946	100000PF 50V Z F 2012 R/TP
		C936	0CH3104K946	100000PF 50V Z F 2012 R/TP
		C937	0CH3104K946	100000PF 50V Z F 2012 R/TP
		C938	0CH3104K946	100000PF 50V Z F 2012 R/TP
		C939	0CH3104K946	100000PF 50V Z F 2012 R/TP
		C940	0CH3104K946	100000PF 50V Z F 2012 R/TP
		C943	0CH3104K946	100000PF 50V Z F 2012 R/TP
		C944	0CH3104K946	100000PF 50V Z F 2012 R/TP
		C945	0CH3104K946	100000PF 50V Z F 2012 R/TP
		C946	0CH3104K946	100000PF 50V Z F 2012 R/TP
		C947	0CH3104K946	100000PF 50V Z F 2012 R/TP
		C948	0CH3104K946	100000PF 50V Z F 2012 R/TP
		C949	0CH3104K946	100000PF 50V Z F 2012 R/TP
		C950	0CH3104K946	100000PF 50V Z F 2012 R/TP
		C956	0CH3104K946	100000PF 50V Z F 2012 R/TP
		C964	0CH3104K946	100000PF 50V Z F 2012 R/TP
		C965	0CH3104K946	100000PF 50V Z F 2012 R/TP
		C967	0CH3104K946	100000PF 50V Z F 2012 R/TP
		C968	0CH3104K946	100000PF 50V Z F 2012 R/TP
		C970	0CH3104K946	100000PF 50V Z F 2012 R/TP
		C13	0CH6102K406	1000PF 50V J SL 2012 R/TP
		C14	0CH6102K406	1000PF 50V J SL 2012 R/TP
		C2	0CH6102K406	1000PF 50V J SL 2012 R/TP
		C20	0CH6102K406	1000PF 50V J SL 2012 R/TP
		C21	0CH6102K406	1000PF 50V J SL 2012 R/TP
		C46	0CH6102K406	1000PF 50V J SL 2012 R/TP
		C50	0CH6102K406	1000PF 50V J SL 2012 R/TP
		C59	0CH6102K406	1000PF 50V J SL 2012 R/TP
		C7	0CH6221K416	220PF 50V J NP0 2012 R/TP
		C8	0CH6221K416	220PF 50V J NP0 2012 R/TP
		C9	0CH6221K416	220PF 50V J NP0 2012 R/TP
		C923	0CH6050K116	5PF 50V D NP0 2012 R/TP
		C924	0CH6050K116	5PF 50V D NP0 2012 R/TP
		C129	181-007F	"MPE ECQ-V1H224JL3(TR), 50V 0."
		C130	181-007F	"MPE ECQ-V1H224JL3(TR), 50V 0."
		C1007	0CH3103K516	10000PF 50V 10% B(Y5P) 2012 R
		C1010	0CK273DK51A	27000PF 2012 50V 10% B(Y5P) R
		C1015	0CH5390K416	39PF 50V 5% NP0 2012 R/TP
		C1016	0CH5390K416	39PF 50V 5% NP0 2012 R/TP
		C107	0CK225DFK4A	"2.2UF 2012 16V 20%,-20% F(Y5V"
		C109	0CH3103K516	10000PF 50V 10% B(Y5P) 2012 R
		C110	0CH3103K516	10000PF 50V 10% B(Y5P) 2012 R
		C113	0CK225DFK4A	"2.2UF 2012 16V 20%,-20% F(Y5V"
		C900	0CH3103K516	10000PF 50V 10% B(Y5P) 2012 R
		C902	0CH3103K516	10000PF 50V 10% B(Y5P) 2012 R
		C955	0CH5390K416	39PF 50V 5% NP0 2012 R/TP
		C1001	0CK103CK51A	0.01UF 1608 50V 10% R/TP B(Y5
		C1002	0CK103CK51A	0.01UF 1608 50V 10% R/TP B(Y5
		C1003	0CK103CK51A	0.01UF 1608 50V 10% R/TP B(Y5
		C1004	0CK103CK51A	0.01UF 1608 50V 10% R/TP B(Y5
		C11	0CK104CK56A	0.1UF 1608 50V 10% R/TP X7R
		C114	0CK225DFK4A	"2.2UF 2012 16V 20%,-20% F(Y5V"

DATE: 2004. 06.16.

*S	*AL	LOC. NO.	PART NO.	DESCRIPTION / SPECIFICATION
		C115	0CK104CK56A	0.1UF 1608 50V 10% R/TP X7R
		C116	0CK562CK51A	5600PF 1608 50V 10% R/TP B(Y5
		C117	0CK562CK51A	5600PF 1608 50V 10% R/TP B(Y5
		C118	0CK104CK56A	0.1UF 1608 50V 10% R/TP X7R
		C12	0CK104CK56A	0.1UF 1608 50V 10% R/TP X7R
		C125	0CK105EK56A	1UF 3216 50V 10% X7R R/TP
		C126	0CK105EK56A	1UF 3216 50V 10% X7R R/TP
		C200	0CK104CK56A	0.1UF 1608 50V 10% R/TP X7R
		C22	0CK822CK56A	8200PF 1608 50V 10% X7R R/TP
		C23	0CK104CK56A	0.1UF 1608 50V 10% R/TP X7R
		C24	0CK822CK56A	8200PF 1608 50V 10% X7R R/TP
		C25	0CK104CK56A	0.1UF 1608 50V 10% R/TP X7R
		C26	0CK104CK56A	0.1UF 1608 50V 10% R/TP X7R
		C27	0CK104CK56A	0.1UF 1608 50V 10% R/TP X7R
		C28	0CK334CF94A	"0.33UF 1608 16V 80%,-20% F(Y5"
		C29	0CK104CK56A	0.1UF 1608 50V 10% R/TP X7R
		C3	0CK104CK56A	0.1UF 1608 50V 10% R/TP X7R
		C30	0CK334CF94A	"0.33UF 1608 16V 80%,-20% F(Y5"
		C31	0CK104CK56A	0.1UF 1608 50V 10% R/TP X7R
		C32	0CK334CF94A	"0.33UF 1608 16V 80%,-20% F(Y5"
		C33	0CK334CF94A	"0.33UF 1608 16V 80%,-20% F(Y5"
		C34	0CK104CK56A	0.1UF 1608 50V 10% R/TP X7R
		C35	0CK334CF94A	"0.33UF 1608 16V 80%,-20% F(Y5"
		C37	0CK334CF94A	"0.33UF 1608 16V 80%,-20% F(Y5"
		C40	0CK104CK56A	0.1UF 1608 50V 10% R/TP X7R
		C42	0CK104CK56A	0.1UF 1608 50V 10% R/TP X7R
		C45	0CK104CK56A	0.1UF 1608 50V 10% R/TP X7R
		C52	0CK104CK56A	0.1UF 1608 50V 10% R/TP X7R
		C67	0CK104CK56A	0.1UF 1608 50V 10% R/TP X7R
		C75	0CK104CK56A	0.1UF 1608 50V 10% R/TP X7R
		C800	0CK105CF94A	"1UF 1608 16V 80%,-20% R/TP F("
		C801	0CK105CF94A	"1UF 1608 16V 80%,-20% R/TP F("
		C802	0CK105CF94A	"1UF 1608 16V 80%,-20% R/TP F("
		C807	0CK104CK56A	0.1UF 1608 50V 10% R/TP X7R
		C811	0CK105CF94A	"1UF 1608 16V 80%,-20% R/TP F("
		C816	0CK104CK56A	0.1UF 1608 50V 10% R/TP X7R
		C82	0CK104CK56A	0.1UF 1608 50V 10% R/TP X7R
		C861	0CK104CK56A	0.1UF 1608 50V 10% R/TP X7R
		C865	0CK104CK56A	0.1UF 1608 50V 10% R/TP X7R
		C901	0CK103CK51A	0.01UF 1608 50V 10% R/TP B(Y5
		C903	0CK103CK51A	0.01UF 1608 50V 10% R/TP B(Y5
		C904	0CK103CK51A	0.01UF 1608 50V 10% R/TP B(Y5
		C905	0CK103CK51A	0.01UF 1608 50V 10% R/TP B(Y5
		C906	0CK103CK51A	0.01UF 1608 50V 10% R/TP B(Y5
		C911	0CK104CK56A	0.1UF 1608 50V 10% R/TP X7R
		C912	0CK104CK56A	0.1UF 1608 50V 10% R/TP X7R
		C913	0CK104CK56A	0.1UF 1608 50V 10% R/TP X7R
		C914	0CK104CK56A	0.1UF 1608 50V 10% R/TP X7R
		C915	0CK104CK56A	0.1UF 1608 50V 10% R/TP X7R
		C916	0CK104CK56A	0.1UF 1608 50V 10% R/TP X7R
		C918	0CK104CK56A	0.1UF 1608 50V 10% R/TP X7R
		C919	0CK104CK56A	0.1UF 1608 50V 10% R/TP X7R
		C921	0CK104CK56A	0.1UF 1608 50V 10% R/TP X7R
		C922	0CK104CK56A	0.1UF 1608 50V 10% R/TP X7R
		C961	0CK104CK56A	0.1UF 1608 50V 10% R/TP X7R
		C121	0CC100CK41A	10PF 1608 50V 5% R/TP NP0
		C122	0CC100CK41A	10PF 1608 50V 5% R/TP NP0
		C43	0CC102CK41A	1000PF 1608 50V 5% R/TP NP0
		C47	0CC220CK41A	22PF 1608 50V 5% R/TP NP0
		C48	0CC220CK41A	22PF 1608 50V 5% R/TP NP0
		C53	0CC102CK41A	1000PF 1608 50V 5% R/TP NP0
		C56	0CC221CK41A	220PF 1608 50V 5% R/TP NP0

DATE: 2004. 06.16.

*S	*AL	LOC. NO.	PART NO.	DESCRIPTION / SPECIFICATION
		C57	0CC221CK41A	220PF 1608 50V 5% R/TP NP0
		C58	0CC221CK41A	220PF 1608 50V 5% R/TP NP0
		C74	0CC102CK41A	1000PF 1608 50V 5% R/TP NP0
		C83	0CC102CK41A	1000PF 1608 50V 5% R/TP NP0
		C85	0CC102CK41A	1000PF 1608 50V 5% R/TP NP0
		C86	0CC102CK41A	1000PF 1608 50V 5% R/TP NP0
		C88	0CC390CK41A	39PF 1608 50V 5% R/TP NP0
		C89	0CC390CK41A	39PF 1608 50V 5% R/TP NP0
		C108	0CE476VH6DC	47UF MV 25V 20% R/TP(SMD) SMD
		C1102	0CE107WF6DC	100UF MVK 16V 20% R/TP(SMD) S
		C1103	0CE107WF6DC	100UF MVK 16V 20% R/TP(SMD) S
		C1105	0CH8476F691	47UF 16V 20% 105STD (CYL) R/T
		C1106	0CE107WF6DC	100UF MVK 16V 20% R/TP(SMD) S
		C1109	0CE107WF6DC	100UF MVK 16V 20% R/TP(SMD) S
		C111	0CE475WJ6DC	4.7UF MVK 35V 20% R/TP(SMD) S
		C1118	0CE107WF6DC	100UF MVK 16V 20% R/TP(SMD) S
		C112	0CE475WJ6DC	4.7UF MVK 35V 20% R/TP(SMD) S
		C1124	0CE107WF6DC	100UF MVK 16V 20% R/TP(SMD) S
		C1130	0CE107WF6DC	100UF MVK 16V 20% R/TP(SMD) S
		C1132	0CE107WF6DC	100UF MVK 16V 20% R/TP(SMD) S
		C1134	0CE107WF6DC	100UF MVK 16V 20% R/TP(SMD) S
		C1135	0CE107WF6DC	100UF MVK 16V 20% R/TP(SMD) S
		C119	0CH8106F691	10UF 16V 20% 105STD (CYL) R/T
		C120	0CH8106F691	10UF 16V 20% 105STD (CYL) R/T
		C17	0CE475WJ6DC	4.7UF MVK 35V 20% R/TP(SMD) S
		C5	0CE475WJ6DC	4.7UF MVK 35V 20% R/TP(SMD) S
		C55	0CE475VK6DC	4.7UF MV 50V 20% R/TP(SMD) SM
		C60	0CE475VK6DC	4.7UF MV 50V 20% R/TP(SMD) SM
		C852	0CH8476F691	47UF 16V 20% 105STD (CYL) R/T
		C856	0CH8476F691	47UF 16V 20% 105STD (CYL) R/T
		C859	0CH8476F691	47UF 16V 20% 105STD (CYL) R/T
		C87	0CE107WF6DC	100UF MVK 16V 20% R/TP(SMD) S
		C876	0CH8106F691	10UF 16V 20% 105STD (CYL) R/T
		DIODEs		
		D100	0DRFC00288A	SS14 FAIR CHILD R/TP SMA 20-1
		D101	0DRFC00288A	SS14 FAIR CHILD R/TP SMA 20-1
		D1150	0DRGS00199A	UF4001 GENERAL SEMICONDUCTOR
		D102	0DS181009AA	KDS181 TP KEC SOT-23 80V 30
		D103	0DS181009AA	KDS181 TP KEC SOT-23 80V 30
		D107	0DS226009AA	KDS226 TP KEC SOT-23 80V 300
		ZD104	0DZ620009HB	UDZ S 6.2B TP ROHM SOD323 200
		ZD105	0DZ620009HB	UDZ S 6.2B TP ROHM SOD323 200
		ZD207	0DZ510009EE	UDZ S 5.1B TP ROHM-K SOD323 2
		ZD208	0DZ510009EE	UDZ S 5.1B TP ROHM-K SOD323 2
		ZD200	0DZ510009EE	UDZ S 5.1B TP ROHM-K SOD323 2
		ZD201	0DZ510009EE	UDZ S 5.1B TP ROHM-K SOD323 2
		ZD202	0DZ510009EE	UDZ S 5.1B TP ROHM-K SOD323 2
		ZD203	0DZ510009EE	UDZ S 5.1B TP ROHM-K SOD323 2
		ZD204	0DZ510009EE	UDZ S 5.1B TP ROHM-K SOD323 2
		ZD205	0DZ510009EE	UDZ S 5.1B TP ROHM-K SOD323 2
		ZD206	0DZ510009EE	UDZ S 5.1B TP ROHM-K SOD323 2
		D1151	0DZ330009DF	MTZJ33B TP ROHM-K DO34 0.5W 3
		IC		
		IC905	0IZZTSA002A	ML-041B VGA NT ATMEL 32P PLCC
		IC3	0IKE702700D	"KIA7027AF 3, SOT-89 TP RESET"
		IC200	0IMMRSG036A	"M24C02-WMN6T SGS-THOMSON 8P,S"
		IC4	0IMCRAL006A	AT24C16AN-10SI-2.7 ATMEL 8P S
		IC903	0IMCRAL006A	AT24C16AN-10SI-2.7 ATMEL 8P S

DATE: 2004. 06.16.

*S	*AL	LOC. NO.	PART NO.	DESCRIPTION / SPECIFICATION
		IC100	0IMCRMZ002A	MP7720 MONOLITHIC POWER SYSTE
		IC101	0IMCRMZ002A	MP7720 MONOLITHIC POWER SYSTE
		IC202	0IMO140662A	"MC14066BDR2 14P,SOIC TP BILAT"
		IC1	0IPRPMN003C	VCT49XYF C7(NTSC+PAL) MICRONA
		IC800	0IPRPNP001A	"SM5301BS(ATSC DTV) NPC 28P,HS"
		IC901	0IPRPGN015A	"GM2221 GENESIS 208P,QFP TRAY"
		IC1101	0IPMGFA061A	"FAN1587AD33X FAIRCHILD 3P,DPA"
		IC1103	0IPMGSG018D	"LD1086DT18TR SGS-THOMSON 3P,D"
		IC1108	0IMCRKE010A	KIA7812AF KEC 2P DPACK R/TP 1
		IC1111	0IMCRFA015A	KA7805R FAIRCHILD 2P D-PAK R/
		IC1105	0IPMGFA061A	"FAN1587AD33X FAIRCHILD 3P,DPA"
		IC1106	0IPMGSG018D	"LD1086DT18TR SGS-THOMSON 3P,D"
		IC1114	0IPMGFA061A	"FAN1587AD33X FAIRCHILD 3P,DPA"
		IC1115	0IPMGFA061A	"FAN1587AD33X FAIRCHILD 3P,DPA"
		IC1110	0ISS780800J	"KA78M08R 3P,D-PAK TP VOL. REG"
		IC1113	0ISS780800J	"KA78M08R 3P,D-PAK TP VOL. REG"
COIL & CORE & INDUCTOR				
		L104	6140TBZ045A	"38.5UH(DIP), 6A, P7.5, DR8.3X"
		L105	6140TBZ045A	"38.5UH(DIP), 6A, P7.5, DR8.3X"
		L1150	150-985B	DR8*11 2.4MH 0.16MM 270.5T
		L1100	6210TCE001G	HH-1M3216-501 CERATEC 3216MM
		L1101	6210TCE001G	HH-1M3216-501 CERATEC 3216MM
		L1103	6210TCE001A	HB-1S2012-080JT CERATEC 2012M
		L1104	6210TCE001A	HB-1S2012-080JT CERATEC 2012M
		L1105	6210TCE001G	HH-1M3216-501 CERATEC 3216MM
		L1106	6210TCE001G	HH-1M3216-501 CERATEC 3216MM
		L200	6210TCE001A	HB-1S2012-080JT CERATEC 2012M
		L201	6210TCE001A	HB-1S2012-080JT CERATEC 2012M
		L202	6210TCE001A	HB-1S2012-080JT CERATEC 2012M
		L203	6210TCE001A	HB-1S2012-080JT CERATEC 2012M
		L204	6210TCE001G	HH-1M3216-501 CERATEC 3216MM
		L853	6210TCE001G	HH-1M3216-501 CERATEC 3216MM
		L900	6210TCE001G	HH-1M3216-501 CERATEC 3216MM
		L901	6210TCE001G	HH-1M3216-501 CERATEC 3216MM
		L902	6210TCE001G	HH-1M3216-501 CERATEC 3216MM
		L903	6210TCE001G	HH-1M3216-501 CERATEC 3216MM
		R215	6210TCE001A	HB-1S2012-080JT CERATEC 2012M
		R216	6210TCE001A	HB-1S2012-080JT CERATEC 2012M
		L205	6210TCE001A	HB-1S2012-080JT CERATEC 2012M
		L800	6210TCE001G	HH-1M3216-501 CERATEC 3216MM
		L906	6210TCE001G	HH-1M3216-501 CERATEC 3216MM
		L907	6210TCE001G	HH-1M3216-501 CERATEC 3216MM
		L10	0LC1032101A	10UH 10% 3216 R/TC FI-C3216-1
		L15	0LC1032101A	10UH 10% 3216 R/TC FI-C3216-1
		L2	0LC1032101A	10UH 10% 3216 R/TC FI-C3216-1
		L1001	0LC1020101A	1UH 10% 2012 R/TC FI-B2012-10
		L1002	0LC1032101A	10UH 10% 3216 R/TC FI-C3216-1
		L8	0LC1032101A	10UH 10% 3216 R/TC FI-C3216-1
FET & TRANSISTOR				
		IC1107	0TF492509AA	SI4925DY TP TEMIC 30V 6.1A S
		Q1150	0TR322809AB	KTC3228-Y(KTC2383) TP KEC TO9
		Q1	0TR387500AA	CHIP 2SC3875S(ALY) BK KEC - -
		Q603	0TR387500AA	CHIP 2SC3875S(ALY) BK KEC - -
		Q100	0TR387500AA	CHIP 2SC3875S(ALY) BK KEC - -
		Q1000	0TR388109AA	KTC3881 CHIP TP KEC - -
		Q101	0TR150400BA	CHIP 2SA1504S(ASY) BK KEC - -
		Q1100	0TR387500AA	CHIP 2SC3875S(ALY) BK KEC - -
		Q1151	0TR387500AA	CHIP 2SC3875S(ALY) BK KEC - -

DATE: 2004. 06.16.

*S	*AL	LOC. NO.	PART NO.	DESCRIPTION / SPECIFICATION
		Q12	0TR150400BA	CHIP 2SA1504S(ASY) BK KEC - -
		Q13	0TR150400BA	CHIP 2SA1504S(ASY) BK KEC - -
		Q14	0TR150400BA	CHIP 2SA1504S(ASY) BK KEC - -
		Q15	0TR387500AA	CHIP 2SC3875S(ALY) BK KEC - -
		IC902	0TFVI80005A	VISHAY SI4963DY R/TP SO-8 -20
		IC1104	0TFVI80005A	VISHAY SI4963DY R/TP SO-8 -20
RESISTORs				
		R1010	0RH7501D622	7.5K 1/10W 5 D.R/TP
		R1012	0RH7502D622	75K 1/10W 5 D.R/TP
		R106	0RH1500D622	150 1/10W 5 D.R/TP
		R107	0RH1003D622	100K 1/10W 5 D.R/TP
		R1151	0RH4700D622	470 1/10W 5 D.R/TP
		R1153	0RH1000D622	100 1/10W 5 D.R/TP
		R126	0RH4701D622	4.7K 1/10W 5 D.R/TP
		R132	0RH1003D622	100K 1/10W 5 D.R/TP
		R133	0RH1003D622	100K 1/10W 5 D.R/TP
		R134	0RH1003D622	100K 1/10W 5 D.R/TP
		R135	0RH1003D622	100K 1/10W 5 D.R/TP
		R14	0RH4701D622	4.7K 1/10W 5 D.R/TP
		R140	0RH0392D622	39 1/10W 5 D.R/TP
		R141	0RH0392D622	39 1/10W 5 D.R/TP
		R142	0RH0392D622	39 1/10W 5 D.R/TP
		R143	0RH0392D622	39 1/10W 5 D.R/TP
		R144	0RH0392D622	39 1/10W 5 D.R/TP
		R145	0RH0392D622	39 1/10W 5 D.R/TP
		R146	0RH0392D622	39 1/10W 5 D.R/TP
		R147	0RH0392D622	39 1/10W 5 D.R/TP
		R201	0RH4701D622	4.7K 1/10W 5 D.R/TP
		R204	0RH4701D622	4.7K 1/10W 5 D.R/TP
		R211	0RH0752D622	75 1/10W 5 D.R/TP
		R212	0RH0752D622	75 1/10W 5 D.R/TP
		R213	0RH0752D622	75 1/10W 5 D.R/TP
		R214	0RH4703D622	470K 1/10W 5 D.R/TP
		R217	0RH4703D622	470K 1/10W 5 D.R/TP
		R222	0RH1000D622	100 1/10W 5 D.R/TP
		R223	0RH1000D622	100 1/10W 5 D.R/TP
		R228	0RH1000D622	100 1/10W 5 D.R/TP
		R57	0RH1000D622	100 1/10W 5 D.R/TP
		R59	0RH1201D622	1.2K 1/10W 5 D.R/TP
		R6	0RH4702D622	47K 1/10W 5 D.R/TP
		R818	0RH8200D622	820 1/10W 5 D.R/TP
		R9	0RH4701D622	4.7K 1/10W 5 D.R/TP
		R908	0RH0822D622	82 1/10W 5 D.R/TP
		R910	0RH0822D622	82 1/10W 5 D.R/TP
		R915	0RH3600D622	CHIP 360-J 1/10 W
		R934	0RH1000D622	100 1/10W 5 D.R/TP
		R989	0RH8200D622	820 1/10W 5 D.R/TP
		R999	0RH1000D622	100 1/10W 5 D.R/TP
		R136	0RH8202D622	82K 1/10W 5 D.R/TP
		R137	0RH8202D622	82K 1/10W 5 D.R/TP
		C931	0RH0000D622	0 OHM 1 / 10 W 2012 5.00% D
		C932	0RH0000D622	0 OHM 1 / 10 W 2012 5.00% D
		C933	0RH0000D622	0 OHM 1 / 10 W 2012 5.00% D
		L905	0RH0222D622	22 OHM 1 / 10 W 2012 5.00% D
		R1011	0RH0000D622	0 OHM 1 / 10 W 2012 5.00% D
		R1106	0RH1002D622	10K OHM 1 / 10 W 2012 5.00% D
		R1152	0RH1001D622	1K OHM 1 / 10 W 2012 5.00% D
		R12	0RH1001D622	1K OHM 1 / 10 W 2012 5.00% D
		R128	0RH1002D622	10K OHM 1 / 10 W 2012 5.00% D
		R129	0RH1002D622	10K OHM 1 / 10 W 2012 5.00% D

DATE: 2004. 06.16.

*S	*AL	LOC. NO.	PART NO.	DESCRIPTION / SPECIFICATION
		R13	0RH1001D622	1K OHM 1 / 10 W 2012 5.00% D
		R202	0RH0222D622	22 OHM 1 / 10 W 2012 5.00% D
		R208	0RH0222D622	22 OHM 1 / 10 W 2012 5.00% D
		R209	0RH0222D622	22 OHM 1 / 10 W 2012 5.00% D
		R210	0RH0222D622	22 OHM 1 / 10 W 2012 5.00% D
		R37	0RH0222D622	22 OHM 1 / 10 W 2012 5.00% D
		R7	0RH0000D622	0 OHM 1 / 10 W 2012 5.00% D
		R817	0RH0000D622	0 OHM 1 / 10 W 2012 5.00% D
		R822	0RH1002D622	10K OHM 1 / 10 W 2012 5.00% D
		R834	0RH0000D622	0 OHM 1 / 10 W 2012 5.00% D
		R836	0RH0000D622	0 OHM 1 / 10 W 2012 5.00% D
		R837	0RH0000D622	0 OHM 1 / 10 W 2012 5.00% D
		R961	0RH0000D622	0 OHM 1 / 10 W 2012 5.00% D
		R964	0RH1002D622	10K OHM 1 / 10 W 2012 5.00% D
		R10	0RJ3301D677	3.3K OHM 1/10 W 5% 1608 R/TP
		R1001	0RJ0562D677	56 OHM 1/10 W 5% 1608 R/TP
		R1002	0RJ1501D677	1.5K OHM 1/10 W 5% 1608 R/TP
		R1003	0RJ8200D677	820 OHM 1/10 W 5% 1608 R/TP
		R1004	0RJ3000D677	300 OHM 1/10 W 5% 1608 R/TP
		R1005	0RJ0682D677	68 OHM 1/10 W 5% 1608 R/TP
		R1014	0RJ1000D677	100 OHM 1/10 W 5% 1608 R/TP
		R11	0RJ3301D677	3.3K OHM 1/10 W 5% 1608 R/TP
		R1105	0RJ1001D677	1K OHM 1/10 W 5% 1608 R/TP
		R1107	0RJ4701D677	4.7K OHM 1/10 W 5% 1608 R/TP
		R1149	0RH1002D622	10K OHM 1 / 10 W 2012 5.00% D
		R1150	0RJ0102D677	10 OHM 1/10 W 5% 1608 R/TP
		R124	0RJ1500D677	150 OHM 1/10 W 5% 1608 R/TP
		R125	0RJ4701D677	4.7K OHM 1/10 W 5% 1608 R/TP
		R127	0RJ2701D677	2.7K OHM 1/10 W 5% 1608 R/TP
		R130	0RJ1202D677	12K OHM 1/10 W 5% 1608 R/TP
		R131	0RJ1202D677	12K OHM 1/10 W 5% 1608 R/TP
		R138	0RJ1002D677	10K OHM 1/10 W 5% 1608 R/TP
		R139	0RJ1002D677	10K OHM 1/10 W 5% 1608 R/TP
		R15	0RJ0822D677	82 OHM 1/10 W 5% 1608 R/TP
		R16	0RJ2200D677	220 OHM 1/10 W 5% 1608 R/TP
		R17	0RJ0822D677	82 OHM 1/10 W 5% 1608 R/TP
		R18	0RJ2200D677	220 OHM 1/10 W 5% 1608 R/TP
		R19	0RJ0822D677	82 OHM 1/10 W 5% 1608 R/TP
		R20	0RJ2200D677	220 OHM 1/10 W 5% 1608 R/TP
		R203	0RJ1000D677	100 OHM 1/10 W 5% 1608 R/TP
		R205	0RJ0222D677	22 OHM 1/10 W 5% 1608 R/TP
		R206	0RJ1001D677	1K OHM 1/10 W 5% 1608 R/TP
		R207	0RJ1001D677	1K OHM 1/10 W 5% 1608 R/TP
		R21	0RJ0222D677	22 OHM 1/10 W 5% 1608 R/TP
		R22	0RJ1500D677	150 OHM 1/10 W 5% 1608 R/TP
		R221	0RJ1000D677	100 OHM 1/10 W 5% 1608 R/TP
		R224	0RJ1000D677	100 OHM 1/10 W 5% 1608 R/TP
		R225	0RJ1000D677	100 OHM 1/10 W 5% 1608 R/TP
		R226	0RJ1000D677	100 OHM 1/10 W 5% 1608 R/TP
		R23	0RJ2701D677	2.7K OHM 1/10 W 5% 1608 R/TP
		R24	0RJ1000D677	100 OHM 1/10 W 5% 1608 R/TP
		R240	0RJ1000D677	100 OHM 1/10 W 5% 1608 R/TP
		R25	0RJ1000D677	100 OHM 1/10 W 5% 1608 R/TP
		R28	0RJ0000D677	0 OHM 1/10 W 5% 1608 R/TP
		R29	0RJ0000D677	0 OHM 1/10 W 5% 1608 R/TP
		R34	0RJ0000D677	0 OHM 1/10 W 5% 1608 R/TP
		R41	0RJ1000D677	100 OHM 1/10 W 5% 1608 R/TP
		R45	0RJ1000D677	100 OHM 1/10 W 5% 1608 R/TP
		R46	0RJ1001D677	1K OHM 1/10 W 5% 1608 R/TP
		R49	0RJ1000D677	100 OHM 1/10 W 5% 1608 R/TP
		R50	0RJ1000D677	100 OHM 1/10 W 5% 1608 R/TP
		R51	0RJ1000D677	100 OHM 1/10 W 5% 1608 R/TP

DATE: 2004. 06.16.

*S	*AL	LOC. NO.	PART NO.	DESCRIPTION / SPECIFICATION
		R52	0RJ1000D677	100 OHM 1/10 W 5% 1608 R/TP
		R53	0RJ1500D677	150 OHM 1/10 W 5% 1608 R/TP
		R54	0RJ1000D677	100 OHM 1/10 W 5% 1608 R/TP
		R55	0RJ1500D677	150 OHM 1/10 W 5% 1608 R/TP
		R56	0RJ1000D677	100 OHM 1/10 W 5% 1608 R/TP
		R58	0RJ1000D677	100 OHM 1/10 W 5% 1608 R/TP
		R60	0RJ1000D677	100 OHM 1/10 W 5% 1608 R/TP
		R62	0RJ1000D677	100 OHM 1/10 W 5% 1608 R/TP
		R64	0RJ1000D677	100 OHM 1/10 W 5% 1608 R/TP
		R66	0RJ1000D677	100 OHM 1/10 W 5% 1608 R/TP
		R68	0RJ1000D677	100 OHM 1/10 W 5% 1608 R/TP
		R69	0RJ1000D677	100 OHM 1/10 W 5% 1608 R/TP
		R70	0RJ1000D677	100 OHM 1/10 W 5% 1608 R/TP
		R72	0RJ1000D677	100 OHM 1/10 W 5% 1608 R/TP
		R73	0RJ1000D677	100 OHM 1/10 W 5% 1608 R/TP
		R74	0RJ1000D677	100 OHM 1/10 W 5% 1608 R/TP
		R75	0RJ1000D677	100 OHM 1/10 W 5% 1608 R/TP
		R76	0RJ1000D677	100 OHM 1/10 W 5% 1608 R/TP
		R77	0RJ1000D677	100 OHM 1/10 W 5% 1608 R/TP
		R78	0RJ1000D677	100 OHM 1/10 W 5% 1608 R/TP
		R8	0RJ0000D677	0 OHM 1/10 W 5% 1608 R/TP
		R80	0RJ2202D677	22K OHM 1/10 W 5% 1608 R/TP
		R901	0RJ0472D677	47 OHM 1/10 W 5% 1608 R/TP
		R902	0RJ0472D677	47 OHM 1/10 W 5% 1608 R/TP
		R904	0RJ0472D677	47 OHM 1/10 W 5% 1608 R/TP
		R907	0RJ3301D677	3.3K OHM 1/10 W 5% 1608 R/TP
		R909	0RJ0822D677	82 OHM 1/10 W 5% 1608 R/TP
		R911	0RJ4701D677	4.7K OHM 1/10 W 5% 1608 R/TP
		R912	0RJ1000D677	100 OHM 1/10 W 5% 1608 R/TP
		R913	0RJ0000D677	0 OHM 1/10 W 5% 1608 R/TP
		R914	0RJ0000D677	0 OHM 1/10 W 5% 1608 R/TP
		R917	0RJ0000D677	0 OHM 1/10 W 5% 1608 R/TP
		R928	0RJ1000D677	100 OHM 1/10 W 5% 1608 R/TP
		R929	0RJ1000D677	100 OHM 1/10 W 5% 1608 R/TP
		R930	0RJ1000D677	100 OHM 1/10 W 5% 1608 R/TP
		R931	0RJ1000D677	100 OHM 1/10 W 5% 1608 R/TP
		R932	0RJ1000D677	100 OHM 1/10 W 5% 1608 R/TP
		R935	0RJ1000D677	100 OHM 1/10 W 5% 1608 R/TP
		R936	0RJ1000D677	100 OHM 1/10 W 5% 1608 R/TP
		R938	0RJ1002D677	10K OHM 1/10 W 5% 1608 R/TP
		R939	0RJ1000D677	100 OHM 1/10 W 5% 1608 R/TP
		R940	0RJ0000D677	0 OHM 1/10 W 5% 1608 R/TP
		R941	0RJ1000D677	100 OHM 1/10 W 5% 1608 R/TP
		R942	0RJ1000D677	100 OHM 1/10 W 5% 1608 R/TP
		R943	0RJ1000D677	100 OHM 1/10 W 5% 1608 R/TP
		R944	0RJ1000D677	100 OHM 1/10 W 5% 1608 R/TP
		R945	0RJ1000D677	100 OHM 1/10 W 5% 1608 R/TP
		R946	0RJ1000D677	100 OHM 1/10 W 5% 1608 R/TP
		R947	0RJ1000D677	100 OHM 1/10 W 5% 1608 R/TP
		R952	0RJ0000D677	0 OHM 1/10 W 5% 1608 R/TP
		R953	0RJ3301D677	3.3K OHM 1/10 W 5% 1608 R/TP
		R954	0RJ1002D677	10K OHM 1/10 W 5% 1608 R/TP
		R96	0RJ3301D677	3.3K OHM 1/10 W 5% 1608 R/TP
		R979	0RJ3301D677	3.3K OHM 1/10 W 5% 1608 R/TP
		R980	0RJ1000D677	100 OHM 1/10 W 5% 1608 R/TP
		R981	0RJ1000D677	100 OHM 1/10 W 5% 1608 R/TP
		R982	0RJ1000D677	100 OHM 1/10 W 5% 1608 R/TP
		R983	0RJ1000D677	100 OHM 1/10 W 5% 1608 R/TP
		R984	0RJ1000D677	100 OHM 1/10 W 5% 1608 R/TP
		R991	0RJ3301D677	3.3K OHM 1/10 W 5% 1608 R/TP
		R992	0RJ3301D677	3.3K OHM 1/10 W 5% 1608 R/TP

DATE: 2004. 06.16.

*S	*AL	LOC. NO.	PART NO.	DESCRIPTION / SPECIFICATION
		OTHERs		
		Z1000	6200QL3002F	"X6966M EPCOS ST SIP5K, 6200QL"
		X11	6202VDT002E	SX-1SMD SUNNY RADIAL 20250000
		X900	6202VDT002B	SX-1 SUNNY SC14.3MHZ +/- 30 P
		IC905	6620F00017A	CCSD-32T-SM WOOYOUNG 32P PLCC
		TU1000	6700VS0003C	TAEW-G051P LG INOTEK MULTI VS
		CONTROL BOARD		
		R2200	0RN1101F409	1.10K 1/6W 1% TA52
		R2201	0RN8200F409	820 1/6W 1% TA52
		R2202	0RN5600F409	560 1/6W 1% TA52
		R2203	0RN4700F409	470 1/6W 1 TA52
		R2204	0RN3900F409	390 1/6W 1% TA52
		R2205	0RN3300F409	330 1/6W 1% TA52
		R2206	0RN2700F409	270 1/6W 1% TA52
		R2207	0RN3301F409	3.30K 1/6W 1% TA52
		R2208	0RN2000F409	200 1/6W 1% TA52
		SW2200	140-313A	TACT 2LEAD 100G(TA) LG C&D NO
		SW2201	140-313A	TACT 2LEAD 100G(TA) LG C&D NO
		SW2202	140-313A	TACT 2LEAD 100G(TA) LG C&D NO
		SW2203	140-313A	TACT 2LEAD 100G(TA) LG C&D NO
		SW2204	140-313A	TACT 2LEAD 100G(TA) LG C&D NO
		SW2205	140-313A	TACT 2LEAD 100G(TA) LG C&D NO
		SW2206	140-313A	TACT 2LEAD 100G(TA) LG C&D NO
		SW2207	140-313A	TACT 2LEAD 100G(TA) LG C&D NO
		IR BOARD		
		C2101	0CH3104K566	0.1UF 50V 10% X7R 2012 R/TP
		L2101	6210TCE001A	HB-1S2012-080JT CERATEC 2012M
		Q2101	0TR387500AA	CHIP 2SC3875S(ALY) BK KEC - -
		Q2102	0TR387500AA	CHIP 2SC3875S(ALY) BK KEC - -
		Q2103	0TR387500AA	CHIP 2SC3875S(ALY) BK KEC - -
		R2101	0RH1000D622	100 1/10W 5 D.R/TP
		R2102	0RH1000D622	100 1/10W 5 D.R/TP
		R2103	0RH1001D622	1K OHM 1 / 10 W 2012 5.00% D
		R2104	0RH1001D622	1K OHM 1 / 10 W 2012 5.00% D
		R2105	0RH1001D622	1K OHM 1 / 10 W 2012 5.00% D
		R2106	0RH1000D622	100 1/10W 5 D.R/TP
		R2111	0RH4301D622	4.3K 1/10W 5 TA
		R2113	0RH0000D622	0 OHM 1 / 10 W 2012 5.00% D
		LED2100	0DL200000CA	SAM5670(DL-2LRG) BK Y-GREEN -
		PA2101	6726TV0001A	TSOP4838SO1 VISHAY 38.0KHZ HO
		JACK BOARD		
		C1217	0CH3104K946	100000PF 50V Z F 2012 R/TP
		C1221	0CH6331K416	330PF 50V J NP0 2012 R/TP
		C1223	0CH6471K416	470F 50V J NP0 2012 R/TP
		C1224	0CH6471K416	470F 50V J NP0 2012 R/TP
		C1218	0CH6331K416	330PF 50V J NP0 2012 R/TP
		C1219	0CH6331K416	330PF 50V J NP0 2012 R/TP
		C1220	0CH6331K416	330PF 50V J NP0 2012 R/TP
		C1215	0CH3103K516	10000PF 50V 10% B(Y5P) 2012 R
		C1216	0CH3103K516	10000PF 50V 10% B(Y5P) 2012 R
		L1206	6210TCE001A	HB-1S2012-080JT CERATEC 2012M
		L1207	6210TCE001A	HB-1S2012-080JT CERATEC 2012M
		L1208	6210TCE001A	HB-1S2012-080JT CERATEC 2012M
		L1211	6210TCE001A	HB-1S2012-080JT CERATEC 2012M
		L1213	6210TCE001A	HB-1S2012-080JT CERATEC 2012M
		L1214	6210TCE001A	HB-1S2012-080JT CERATEC 2012M

DATE: 2004. 06.16.

*S	*AL	LOC. NO.	PART NO.	DESCRIPTION / SPECIFICATION
		L1215	6210TCE001A	HB-1S2012-080JT CERATEC 2012M
		ZD1200	0DZ620009HB	UDZ S 6.2B TP ROHM SOD323 200
		ZD1206	0DZ620009HB	UDZ S 6.2B TP ROHM SOD323 200
		ZD1207	0DZ620009HB	UDZ S 6.2B TP ROHM SOD323 200
		ZD1212	0DZ620009HB	UDZ S 6.2B TP ROHM SOD323 200
		ZD1213	0DZ620009HB	UDZ S 6.2B TP ROHM SOD323 200
		ZD1214	0DZ620009HB	UDZ S 6.2B TP ROHM SOD323 200
		ZD1210	0DZ620009HB	UDZ S 6.2B TP ROHM SOD323 200
		ZD1211	0DZ620009HB	UDZ S 6.2B TP ROHM SOD323 200
		L1212	0LC0233002A	3.3UH CERATECH R/TP
		L1209	0LC0233002A	3.3UH CERATECH R/TP
		L1210	0LC0233002A	3.3UH CERATECH R/TP
		JA1201	6613V00008F	PMJ014F PARK ELEC E/P(ST)+S-V
		JA1200	6612VJH008D	PJ6063D PARKELEC DVD IN 3P GN
		L1200	0RH0752D622	75 1/10W 5 D.R/TP
		R1202	0RH0752D622	75 1/10W 5 D.R/TP
		R1217	0RH0752D622	75 1/10W 5 D.R/TP
		R1218	0RH0752D622	75 1/10W 5 D.R/TP
		R1219	0RH0752D622	75 1/10W 5 D.R/TP
		R1220	0RH0752D622	75 1/10W 5 D.R/TP
		R1230	0RH0752D622	75 1/10W 5 D.R/TP
		R1231	0RH0752D622	75 1/10W 5 D.R/TP
		R1232	0RH5101D622	5.1K 1/10W 5 D.R/TP
		R1233	0RH4703D622	470K 1/10W 5 D.R/TP
		R1234	0RH5101D622	5.1K 1/10W 5 D.R/TP
		R1235	0RH4703D622	470K 1/10W 5 D.R/TP
		R1226	0RH0472D622	47 1/10W 5 D.R/TP
		R1227	0RH0752D622	75 1/10W 5 D.R/TP
		R1228	0RH0752D622	75 1/10W 5 D.R/TP
		R1229	0RH0752D622	75 1/10W 5 D.R/TP
		L1202	0RH0000D622	0 OHM 1 / 10 W 2012 5.00% D
		L1203	0RH0000D622	0 OHM 1 / 10 W 2012 5.00% D
		R1201	0RH0000D622	0 OHM 1 / 10 W 2012 5.00% D
		R1224	0RJ1000H680	100 OHM 1/2 W 5% 5025 R/TP
		R1225	0RJ1000H680	100 OHM 1/2 W 5% 5025 R/TP
		P1205	6620K00007C	"ISHENG,7007,M.MOUSE,60MM,YH39"

IC1
VCT49xyF

IC2
(PC & M)LA7222

P2
18P_1MM_FFC

P3
(PAL)18P_1MM_FFC

VIDEO OUT BUFFER

IC4
AT24C16

TUNER
(SAW FILTER)

TU1000

TUNER LEG + GND

IC800
SM5301BS

IC851
(PC)M52758FP

IC500
(M)TC90A65F

I2C ADDR : W:B2H / R:B3H

IC901
gm5221

P902
(LPL_15)21P_LVDS

P904
(CMO_20)50P_TTL

P901
(LPL_20)41P_TTL

IC902

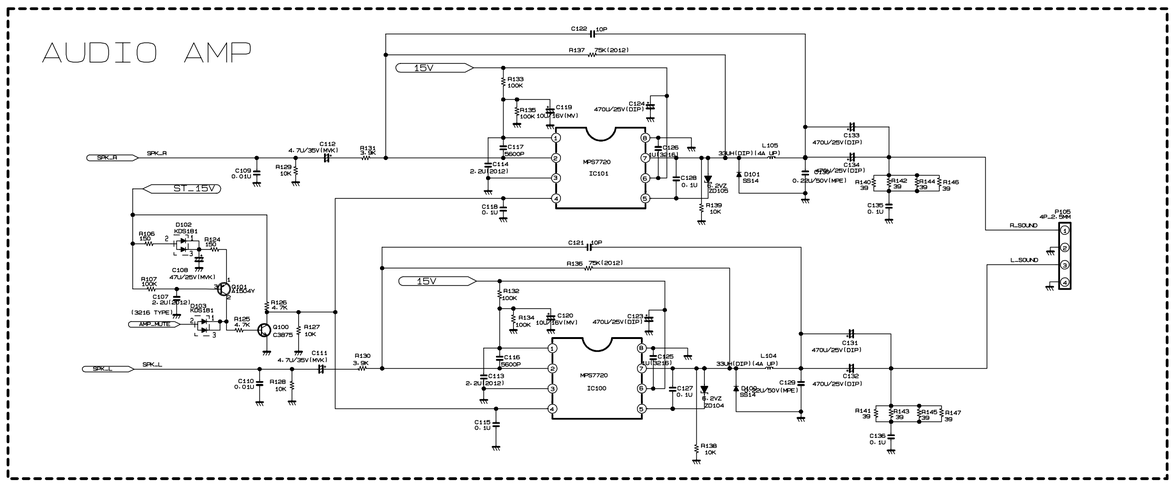

ML041B_3DR_cem_cir/005.sht

SCALE	UNIT	Date	TITLE
	mm		
DSGD.	CHKD.	APPD.	
			04/03/21 18:53:21
			DWG NO.

LG전자

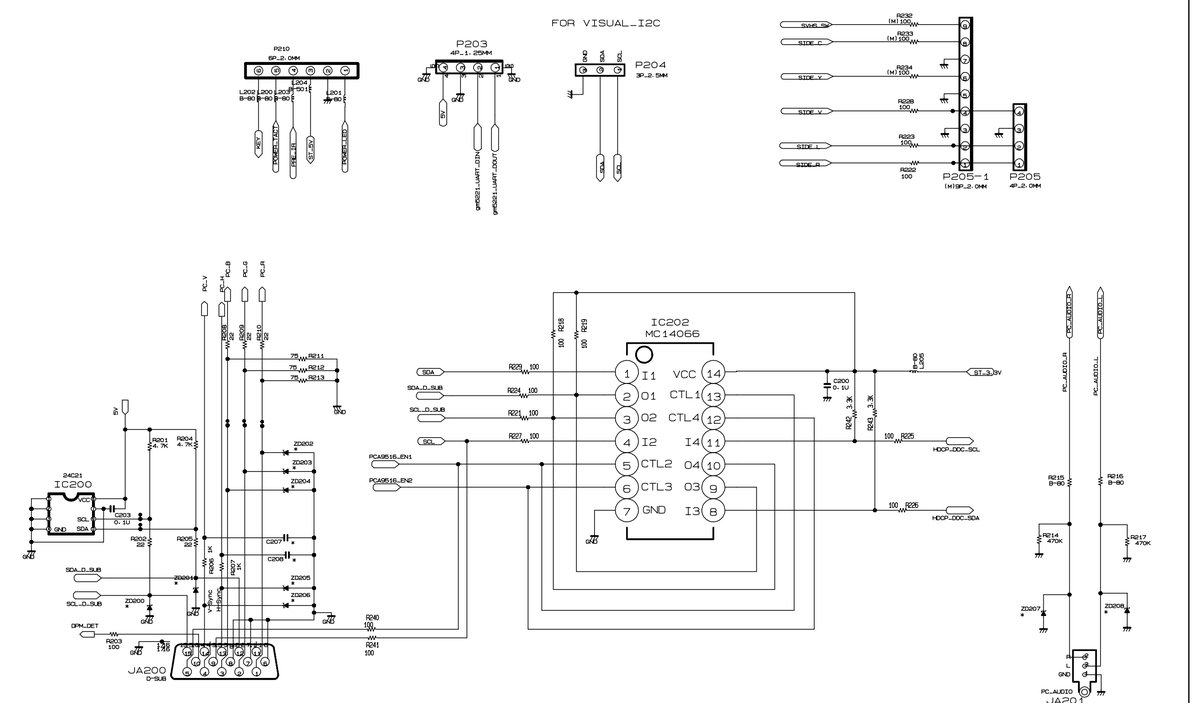

ML041B_3DR_cem_cir/006.sht

SCALE	UNIT	Date	TITLE
	mm		
DSGD.	CHKD.	APPD.	
			04/03/21 18:53:23
			DWG NO.

LG전자

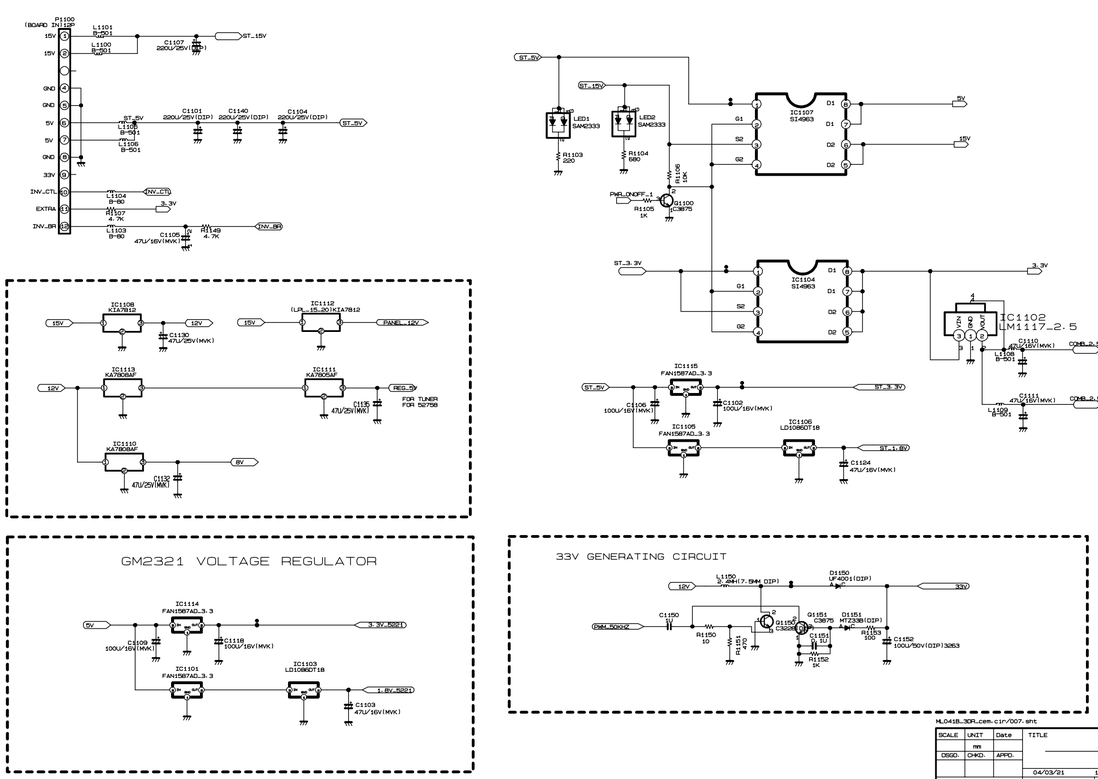

ML041B_3DR_cem_cir/007.sht

SCALE	UNIT	Date	TITLE
	mm		
DSGD.	CHKD.	APPD.	
			04/03/21 18:53:24
			DWG NO.

LG전자

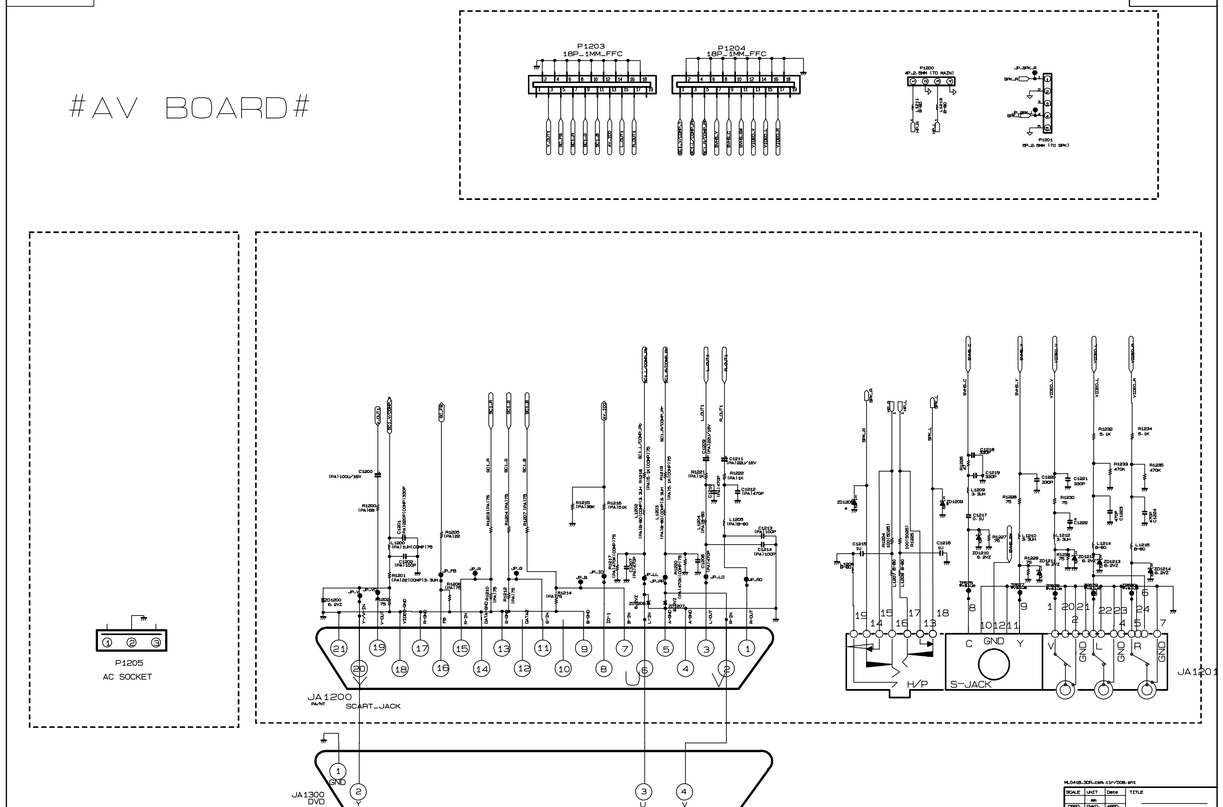

ML041B_3DR_cem_cir/008.sht

SCALE	UNIT	Date	TITLE
	mm		
DSGD.	CHKD.	APPD.	
			04/03/21 18:53:26
			DWG NO.

LG전자

Jun., 2004
P/NO : 3828TSL103N
Printed in Korea